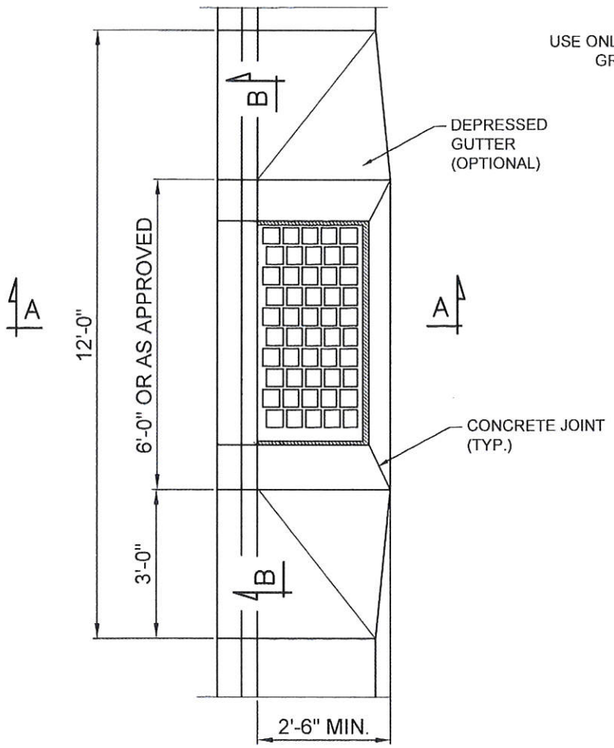

PLAN

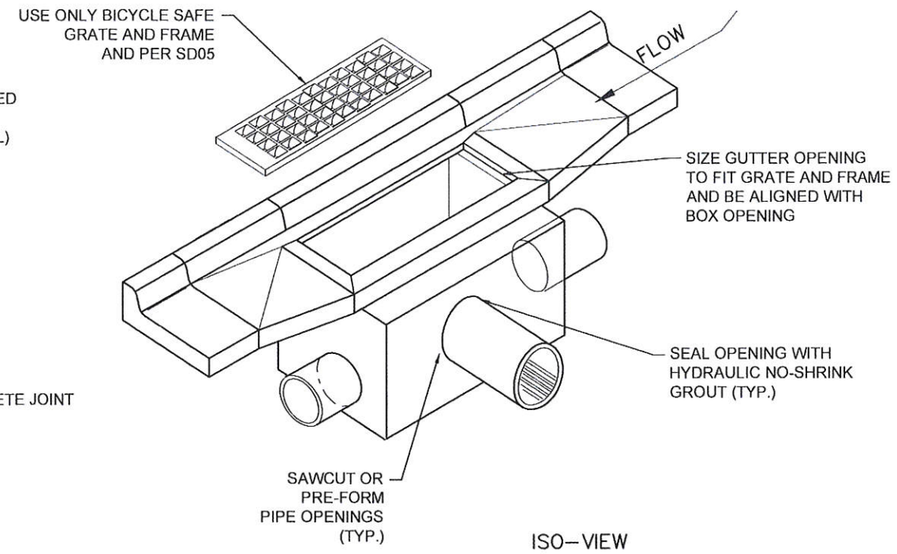

ISOMETRIC VIEW

NOTES:

1. USE COATED DEFORMED REINFORCING STEEL BARS CONFORMING TO AASHTO M 284 OR M 111 AND M 31 GRADE 60 RESPECTIVELY OR GFRP BARS ACCORDING TO THE LATEST AASHTO STANDARDS.
2. FIELD CUT AND BEND REINFORCING STEEL TO CLEAR PIPES AND MAINTAIN 2" COVER. REPAIR ANY DAMAGE OR CUTS TO THE EPOXY COATING ON REINFORCING BARS.
3. USE CONCRETE CLASS 4000 PSI (APWA 033004).
4. USE TYPE II OR V CEMENT (LOW ALKALI).
5. FOR NUMBER, LOCATION, AND SIZE OF PIPE SEE ROADWAY PLANS.
6. SEE PLANS FOR DEPRESSION DIMENSIONS.
7. PROVIDE 3/4" CHAMFER ON ALL EXPOSED CONCRETE CORNERS.
8. FOR GRATE AND FRAME SEE SD05.

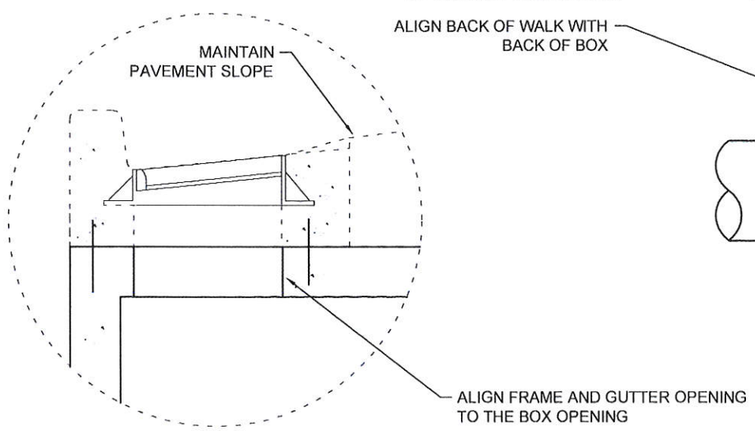

CURB DEPRESSION DETAIL

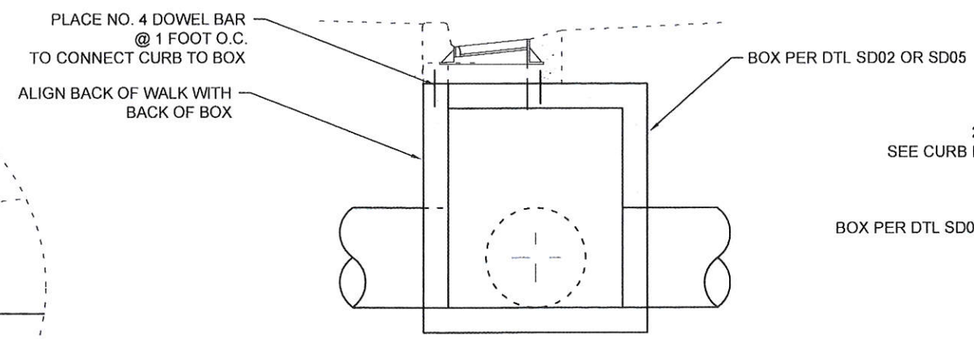

SECTION A–A

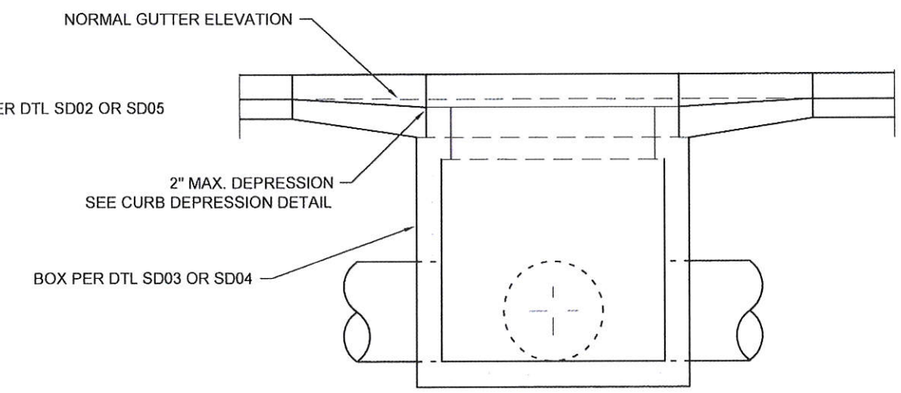

SECTION B–B

THE CITY OF BLUFFDALE	City of Bluffdale Engineering Standards Approved Michael Gazio 15AUG14 City Engineer Date	STANDARD DETAIL TITLE CURB INLET DETAIL	DETAIL SERIES DRAINAGE DETAIL NO SD02