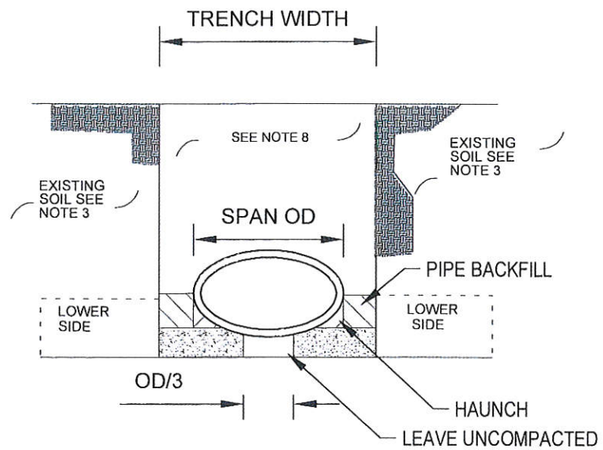

HORIZONTAL ELLIPTICAL PIPE

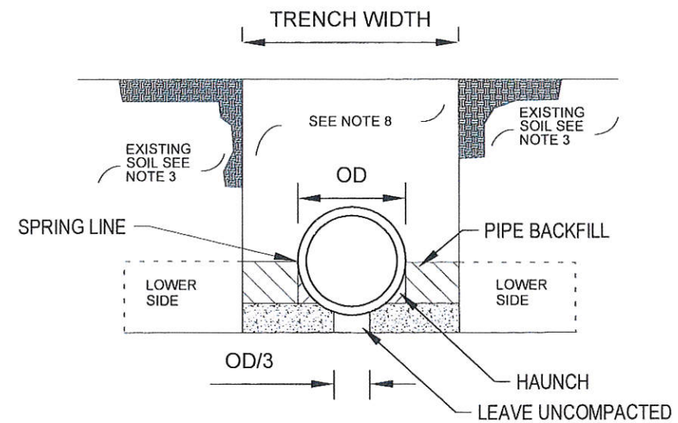

ROUND PIPE

TABLE 1. SOILS AND MINIMUM COMPACTION REQUIREMENTS.

PIPE FOUNDATION OVER	BEDDING THICKNESS	MINIMUM COMPACTION	BACKFILL TYPE
SOIL	OD/24 IN. - 3 IN. MIN.	96%	A1,A3 - SW
ROCK	OD/12 IN.- 6 IN. MIN.	96%	A1,A3 - SW

TABLE 2: REINFORCED CIRCULAR PIPE MAX FILL HEIGHT

PIPE DIA.	PIPE CLASSES			
	II	III	IV	V
INCH	FT	FT	FT	FT
18	16	22	34	52
21	16	22	34	52
24	16	22	34	52
27	16	22	34	52
30	15	22	34	52
33	15	22	34	52
36	15	22	33	51
42	15	22	33	51
48	15	22	33	51
54	15	21	33	51
60	14	21	32	51
66	14	21	32	50
72	14	20	32	50

SEE NOTES 10 AND 11

TABLE 3: REINFORCED ELLIPTICAL PIPE MAX FILL HEIGHT

PIPE DIM. SPAN X RISE	PIPE CLASSES			
	II	III	IV	V
INCH X INCH	FT	FT	FT	FT
14 x 23	-	12	20	30
19 x 30	-	13	21	30
22 x 34	-	13	21	30
24 x 38	9	14	21	30
27 x 42	9	14	21	30
29 x 45	9	14	21	30
32 x 49	10	14	21	30
34 x 53	10	14	21	30
38 x 60	10	14	21	30
43 x 68	10	14	21	30
48 x 76	10	14	21	30
53 x 83	10	14	21	30
58 x 91	10	15	21	30

SEE NOTES 10 AND 11

TABLE 4: NON-REINFORCED CIRCULAR PIPE MAX FILL HEIGHT

PIPE DIA.	PIPE CLASSES		
	1	2	3
INCH	FT	FT	FT
18	15	22	24
21	14	21	25
24	13	20	25
27	12	19	23
30	12	18	21
33	11	17	19
36	10	15	17

SEE NOTE10

TABLE 5: MINIMUM TRENCH WIDTH

PIPE DIA	TRENCH WIDTH
INCH	FT
18	3.9
24	4.5
30	5.1
36	5.7
42	6.3
48	6.8
54	7.4
60	8.0

DIAMETERS ARE INSIDE. ELLIPTICAL PIPE TRENCH WIDTH IS THE NEXT GREATER PIPE DIAMETER.

NOTES:

1. DO NOT INSTALL PIPES DAMAGED OR THAT HAVE CRACKS WIDER THAN 0.01 INCHES.
2. COMPACT BACKFILL ACCORDING TO AASHTO T 99 AND TABLE 1. REMOVE BOULDERS OR ROCKS WITHIN BEDDING AREA.
3. INCREASE THE TRENCH WIDTH TO 2 FT MINIMUM ON EACH SIDE OF THE PIPE WHEN THE THE NATIVE SOIL IS UNSUITABLE OR IS NOT AS STIFF (FIRM) AS THE BACKFILL.
4. OVER-EXCAVATE UNSUITABLE PIPE FOUNDATION MATERIAL AS DIRECTED BY THE ENGINEER. REPLACE WITH PIPE BACKFILL.
5. RECESS THE BEDDING TO RECEIVE PIPE JOINTS WHERE APPLICABLE.
6. DO NOT DISTURB THE INSTALLED PIPE OR EMBEDMENT OR LEAVE VOIDS WHEN USING TRENCH BOXES AND SHIELDS.
7. SEAL THE OPENING AROUND THE PIPE AND THE DRAINAGE STRUCTURE.
8. REFER TO THE PROJECT PLANS FOR MATERIAL OUTSIDE OF PIPE BACKFILL AREA.
9. PROTECT PIPE DURING CONSTRUCTION. DO NOT EXCEED DESIGN STRENGTH.
10. MEASURE MAXIMUM FILL HEIGHT FROM TOP OF PIPE TO TOP OF PAVEMENT SURFACE AT HIGHEST FILL SECTION.
11. ENGINEER TO VERIFY DESIGN FOR LARGER SIZES.
12. USE THE ROUND PIPE EMBANKMENT DETAIL FOR ELLIPTICAL PIPE PLACED IN AN EMBANKMENT CONDITION.
13. VIDEO ALL STORM DRAIN LINE INSTALLED. USE MANDREL TO VERIFY ANY DEFORMATION.
14. REPAIR ALL DAMAGED PIPES TO THE SATISFACTION OF THE ENGINEER.
15. SAWCUT PAVEMENT AT LEAST 1 FOOT AWAY FROM THE TRENCH EDGE ("T TOP"). REPLACE PAVEMENT ACCORDING TO CITY STANDARDS.
16. TRENCH SHALL MEET ALL CURRENT OSHA AND UOSH REQUIREMENTS FOR SAFETY.

THE CITY OF BLUFFDALE

City of Bluffdale
Engineering Standards

Approved Michael Coffo 15 AUG 14
City Engineer Date

STANDARD DETAIL TITLE

PIPE TRENCH BACKFILL

DETAIL SERIES DRAINAGE

DETAIL NO. SD01