JUNCTION BOX NOTES:

1. PROVIDE CARSON INDUSTRIES H OR L SERIES JUNCTION BOXES OR APPROVED EQUAL. PROVIDE AASHTO TRAFFIC LOAD RATED JUNCTION BOXES IN PRE-CAST POLYMER CONCRETE IN AREAS WHERE USED BY VEHICLES.
2. INSTALL FUSES IN WATERPROOF FUSE HOLDERS. PROVIDE FUSE HOLDERS TO DISCONNECT ALL CONDUCTORS SIMULTANEOUSLY AND SECURE FUSES IN NON-ENERGIZED SIDE OF FUSE HOLDER WHEN OPENED. PROVIDE IDEAL-BUCHANAN SLK OR APPROVED EQUAL.
3. PROVIDE WATERPROOF BOXES.
4. INSTALL BOXES LEVEL WITH SURROUNDING FINISH SURFACE. RE-INSTALLED, RE-GRADED, AND RE-COMPACTED BOXES THAT SETTLE OUT OF LEVEL.
5. INSTALL COVER WITH "LIGHTING" EMBOSSED FOR IDENTIFICATION. REPLACE COVER IF DAMAGED.
6. SECURE COVER WITH STAINLESS STEEL HEX HEAD BOLTS WITH WASHER. RECESS THE HEADS IN THE COVER.

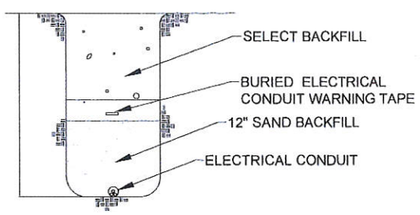

ELECTRICAL CONDUIT TRENCH DETAIL

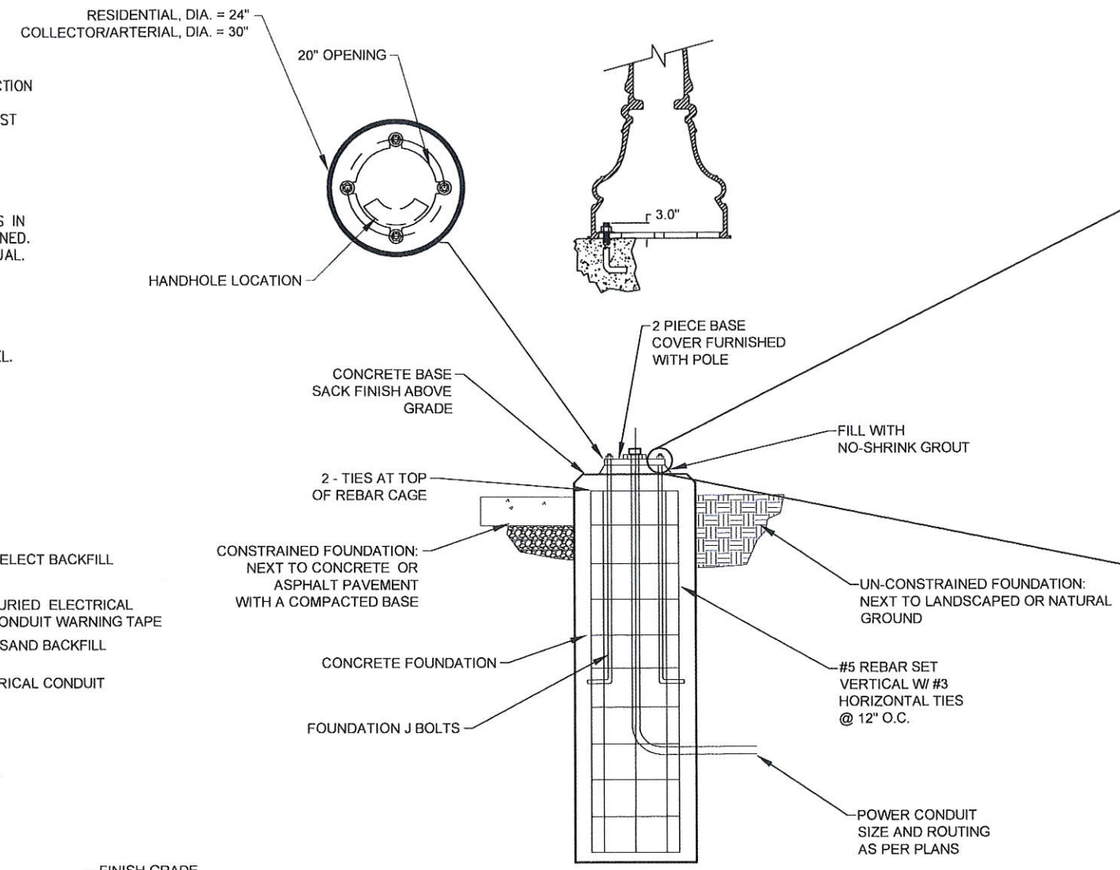

LIGHT POLE FOUNDATION DETAIL

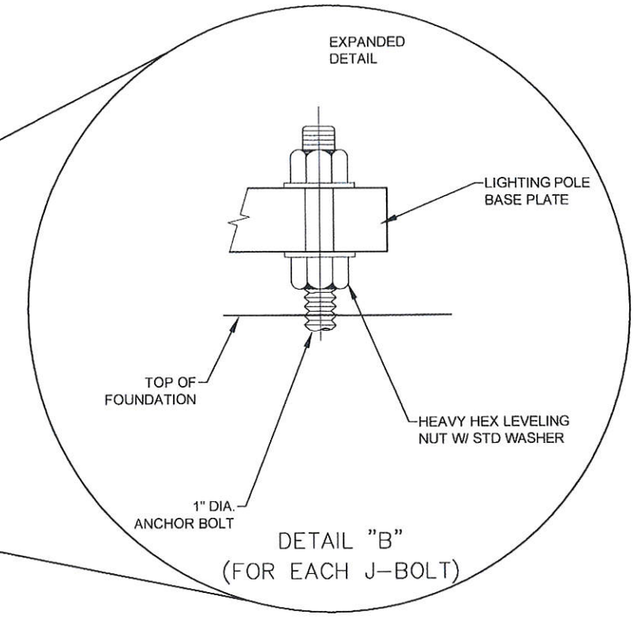

DETAIL "B"
(FOR EACH J-BOLT)

FOUNDATION DIMENSIONS

COLLECTOR/ARTERIAL LIGHT POLES
CONSTRAINED FOUNDATION

DIA.	HEIGHT
2ft	6.5ft
2.5ft	6.25ft

CONSTRAINED FOUNDATION

DIA.	HEIGHT
2ft	8.5ft
2.5ft	8.25ft

RESIDENTIAL LIGHT POLES
CONSTRAINED FOUNDATION

DIA.	HEIGHT
2ft	5.5ft
2.5ft	5.00ft

CONSTRAINED FOUNDATION

DIA.	HEIGHT
2ft	7.5ft
2.5ft	6.75ft

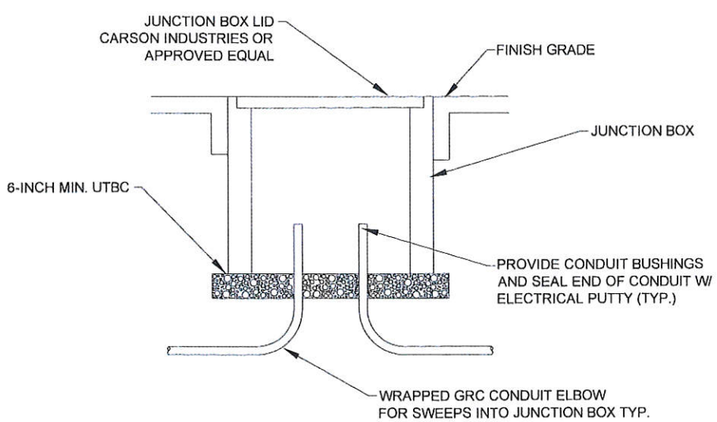

JUNCTION BOX DETAIL

BURIED CONDUIT NOTES:

1. PLACE WARNING TAPE ON TOP OF CONDUIT FOLLOWED BY 3" WIDE RED DETECTABLE-FOIL, ELECTRICAL WARNING TAPE (5 MILS THICKNESS).
2. REQUEST INSPECTION OF THE TRENCH BEFORE BACKFILLING.
3. SPOT BACKFILL TRENCHES TO PREVENT MOVEMENT OF TAPE DURING BACKFILL.
4. COMPACT BACKFILL IN 8 INCH LIFTS.

THE CITY OF BLUFFDALE	City of Bluffdale Engineering Standards Approved Michael Gojo 15AUG14 City Engineer Date	STANDARD DETAIL TITLE STREET LIGHTS - FOUNDATION, JUNCTION BOX, ELECTRICAL CONDUITS	DETAIL SERIES: STREETS DETAIL NO. SL01B