*****AMENDED*****
BLUFFDALE CITY COUNCIL
MEETING AGENDA
Wednesday, July 13, 2016

Notice is hereby given that the Bluffdale City Council will hold a meeting Wednesday, July 13, 2016 at the Bluffdale City Fire Station, 14350 South 2200 West, Bluffdale, Utah scheduled to begin promptly at **6:30 p.m.** or as soon thereafter as possible. Notice is further given that access to this meeting by the Mayor and or City Council may be by electronic means via telephonic conference call.

BLUFFDALE CITY COUNCIL REGULAR BUSINESS MEETING 6:30 P.M.

1. Roll Call, Invocation, Pledge of Allegiance*

2. **PUBLIC FORUM –** (4 minute maximum per person to bring items not already on the agenda before the Council. Participants are encouraged to submit a written statement (1 copy) for items that are complex or that may require more than 4 minutes to present).

3. **CONSENT AGENDA –**

   3.1 Approval of the June 08, 2016 meeting minutes.

   3.2 Approval of a resolution of the Bluffdale City Council authorizing the City Manager to enter into a Construction Agreement for relocation work between Rocky Mountain Power and the City of Bluffdale, for Power Lines located at or near Porter Rockwell Boulevard.

   *******3.3 Preliminary acceptance of Iron Horse Plat B Subdivision, and beginning the warranty period.

   3.4 Approval of a resolution of the Bluffdale City Council authorizing the City Manager to execute a Local Government Contract between the Utah Department of Transportation and the City of Bluffdale for Design of Segment 5 of the Porter Rockwell Boulevard.

   3.5 Approval of a resolution of the Bluffdale City Council authorizing the Mayor to enter into a Cooperative Agreement between the Utah Department of Transportation and the City of Bluffdale for a New Traffic Signal and Roundabout Installation on 14600 South at the Railroad Crossing and 1000 West.

4. Presentation and discussion regarding the Bluffdale City Fire Department Semi-Annual Statistical Report, staff presenter, Fire Chief Roberts.

5. **PUBLIC HEARING –** Consideration and vote on an ordinance amending the City Standards and Specifications related to Typical Street Cross Sections and Electrical Lighting Standards, staff presenter, Michael Fazio.

6. **PUBLIC HEARING –** Consideration and vote on an ordinance amending the City Standards and Specifications, adopting Parks and Recreation Landscape Standards, staff presenter, Michael Fazio.

7. Consideration and vote on Preliminary and Final Subdivision Plat Application for Taylor Acres for six (6) residential lots in the R-1-43 Zone, located at approximately 1950 West 14400 South, Greyfriars Estates, LLC, applicant, staff presenter, Jennifer Robison.

8. Consideration and vote on resolution of the Bluffdale City Council authorizing the City Manager to enter into a General Service Agreement with Erosion Control Services, Inc., to provide Storm Water Pollution Prevention Construction Inspections (SWPPP), staff presenter, Michael Fazio.

9. Consideration and vote on a resolution of the Bluffdale City Council authorizing the Mayor to enter into an Interlocal Cooperation Agreement modifying the 2010 Interlocal Cooperation Agreement that established the Jordan River Commission, with the City of Bluffdale becoming a member of the Commission, staff presenter, Vaughn Pickell.

10. Mayor's Report

11. City Manager's Report and Discussion

PLANNING SESSION

Please Note: The planning session is for identifying future items and other council discussion in accordance with Utah Code § 52-4-201(2)(a). While the meeting may be open to the public, there will not be any opportunity for public input during the planning session.

12. Closed meeting pursuant to Utah Code § 52-4-205(1) to discuss the character, professional competence, or health of an individual, collective bargaining, pending or imminent litigation, strategies to discuss real property acquisition, including any form of a water right or water shares, security issues, or any alleged criminal misconduct (if needed).

13. Adjournment

*****AMENDED this 12th day of July, 2016**

I HEREBY CERTIFY THAT THE FOREGOING NOTICE AND AGENDA WAS FAXED TO THE SOUTH VALLEY JOURNAL, THE SALT LAKE TRIBUNE, AND THE DESERET MORNING NEWS; POSTED AT THE BLUFFDALE CITY HALL, BLUFFDALE CITY FIRE STATION, AND THE COMMUNITY BULLETIN BOARD AT THE BLUFFS APARTMENTS; EMAILED OR DELIVERED TO EACH MEMBER OF THE BLUFFDALE CITY COUNCIL; ON THE CITY'S WEBSITE AT WWW.BLUFFDALE.COM AND ON THE PUBLIC MEETING NOTICE WEBSITE, WWW.PMN.UTAH.GOV

Wendy L. Deppe, CMC
City Recorder

Note: The Bluffdale City Council will take a recess at approximately 9:30 p.m. and will evaluate the time needed to complete items not yet heard on the evening's agenda. Items the Council determines may take the meeting past 10:00 p.m. may be removed from the agenda and re-scheduled for the next regularly scheduled meeting. In compliance with the American with Disabilities Act, individuals needing assistance or other services or accommodation for this meeting should contact Bluffdale City Hall at least 24 hours in advance of this meeting at 801-254-2200. TTY 7-1-1. *Contact the City Recorder if you desire to give the Invocation.

Agenda Item 3.1

BLUFFDALE CITY COUNCIL
LOCAL BUILDING AUTHORITY OF THE CITY OF BLUFFDALE BOARD AND
REDEVELOPMENT AGENCY BOARD
COMBINED MEETING AGENDA
Wednesday, June 08, 2016

Notice is hereby given that the Bluffdale City Council will hold a meeting Wednesday, June 08, 2016 at the Bluffdale City Fire Station, 14350 South 2200 West, Bluffdale, Utah scheduled to begin promptly at **6:30 p.m.** or as soon thereafter as possible. Notice is further given that access to this meeting by the Mayor and or City Council may be by electronic means via telephonic conference call.

BLUFFDALE CITY COUNCIL REGULAR BUSINESS MEETING 6:30 P.M.

1. Roll Call, Invocation, Pledge of Allegiance*

2. **PUBLIC FORUM –** (4 minute maximum per person to bring items not already on the agenda before the Council. Participants are encouraged to submit a written statement (1 copy) for items that are complex or that may require more than 4 minutes to present).

3. **CONSENT AGENDA –**

   3.1 Approval of the May 11, 2016 meeting minutes.

   3.2 Preliminary acceptance of Independence Plat E-5, and beginning the warranty period.

   3.3 Acceptance of Independence G-3 Park and Trails (West Pocket Park), ending the warranty period.

   3.4 Preliminary acceptance of Wood Duck Hollow Phase 1, and beginning the warranty period.

   3.5 Approval of a resolution approving a Franchise Agreement by and between Wirelessbeehive.com, LLC, dba Beehive Broadband, and the City of Bluffdale.

4. Presentation of the Police Quarterly Statistical Report, Sergeant Shane Taylor.

5. Presentation of children safety concerns at Bluffdale Elementary, presenter, Adrienne Donner, Chair, Community Council.

6. Presentation and discussion relating to a new Introduction to the Jordan River Commission, presenter, Laura Hanson, Executive Director, Jordan River Commission.

7. Consideration and vote on a resolution approving a Reimbursement Agreement for Westgate Partners, LLC, regarding transportation impact fees for construction of Noell Nelson Drive, staff presenter, Vaughn Pickell.

8. Presentation and discussion on the Final Budget for the 2016-2017 Fiscal Year, staff presenter, Stephanie Thayer.

LOCAL BUILDING AUTHORITY OF THE CITY OF BLUFFDALE BOARD MEETING

1. Roll Call

2. **CONSENT AGENDA –**
   2.1 Approval of the May 11, 2016 meeting minutes.

3. Presentation and discussion on the Final Budget for the 2016-2017 Fiscal Year, staff presenter, Stephanie Thayer. **(LBA FY2017 Final Budget discussion held in conjunction with the Budget presentation and discussion)**

4. Adjournment

BLUFFDALE CITY REDEVELOPMENT AGENCY BOARD MEETING

1. Roll Call

2. **CONSENT AGENDA –**
   2.1 Approval of the May 11, 2016 meeting minutes.

3. Presentation and discussion on the Final Budget for the 2016-2017 Fiscal Year, staff presenter, Stephanie Thayer. **(RDA FY2017 Final Budget discussion held in conjunction with the Budget presentation and discussion)**

4. Adjournment

CONTINUATION OF BUSINESS MEETING

9. Mayor's Report

10. City Manager's Report and Discussion

PLANNING SESSION

Please Note: The planning session is for identifying future items and other council discussion in accordance with Utah Code § 52-4-201(2)(a). While the meeting may be open to the public, there will not be any opportunity for public input during the planning session.

11. Closed meeting pursuant to Utah Code § 52-4-205(1) to discuss the character, professional competence, or health of an individual, collective bargaining, pending or imminent litigation, strategies to discuss real property acquisition, including any form of a water right or water shares, security issues, or any alleged criminal misconduct (if needed).

12. Adjournment

Dated this 3rd day of June, 2016

I HEREBY CERTIFY THAT THE FOREGOING NOTICE AND AGENDA WAS FAXED TO THE SOUTH VALLEY JOURNAL, THE SALT LAKE TRIBUNE, AND THE DESERET MORNING NEWS; POSTED AT THE BLUFFDALE CITY HALL, BLUFFDALE CITY FIRE STATION, AND THE COMMUNITY BULLETIN BOARD AT THE BLUFFS APARTMENTS; EMAILED OR DELIVERED TO EACH MEMBER OF THE BLUFFDALE CITY COUNCIL; ON THE CITY'S WEBSITE AT WWW.BLUFFDALE.COM AND ON THE PUBLIC MEETING NOTICE WEBSITE, WWW.PMN.UTAH.GOV

Wendy L. Deppe, CMC
City Recorder

Note: The Bluffdale City Council will take a recess at approximately 9:30 p.m. and will evaluate the time needed to complete items not yet heard on the evening's agenda. Items the Council determines may take the meeting past 10:00 p.m. may be removed from the agenda and re-scheduled for the next regularly scheduled meeting. In compliance with the American with Disabilities Act, individuals needing assistance or other services or accommodation for this meeting should contact Bluffdale City Hall at least 24 hours in advance of this meeting at 801-254-2200. TTY 7-1-1. *Contact the City Recorder if you desire to give the Invocation.

DRAFT – FOR DISCUSSION PURPOSES ONLY

BLUFFDALE CITY COUNCIL, LOCAL BUILDING AUTHORITY OF THE CITY OF BLUFFDALE BOARD AND REDEVELOPMENT AGENCY BOARD COMBINED MEETING MINUTES

Wednesday, June 8, 2016

Present: **Mayor Derk Timothy**
Alan Jackson
Ty Nielsen
Boyd Preece
Justin Westwood
James Wingate

Staff: **Mark Reid, City Manager**
Vaughn Pickell, City Attorney
Grant Crowell, City Planner/Economic Development Director
Blain Dietrich, Public Works Operations Manager
Michael Fazio, City Engineer
Stephanie Thayer, Accountant/HR Administrator
Bruce Kartchner, City Treasurer
Brittany Skinner, Assistant City Attorney
Sergeant Shane Taylor
Police Chief, Andrew Burton
Police Officer, Andre "Gian" Gianfelice
Fire Chief, John Roberts
Wendy Deppe, City Recorder

Others: **Johnny Loumis, Jr., Planning Commission Member**
Adrienne Donner, Bluffdale Community Council Chair
Laura Hanson, Jordan River Commission Executive Director
Chris McCandless, Past Chair of the Jordan River Commission
Aimee Newton, Jordan River Commission Chair
Trent Staggs, Jordan River Commission Board Member
Jack Anderson, Rodeo Committee

BLUFFDALE CITY COUNCIL REGULAR BUSINESS MEETING

Mayor Derk Timothy called the meeting to order at 6:30 p.m.

1. Roll Call, Invocation, and Pledge.

All Members of the City Council were present.

Ty Nielsen offered the invocation and led the Pledge.

Ty Nielsen moved to make agenda item number six agenda item number two. Justin Westwood seconded the motion. The motion passed with the unanimous consent of the Council.

2. Presentation and Discussion Relating to a New Introduction to the Jordan River Commission, Presenter, Laura Hanson, Executive Director, Jordan River Commission.

Jordan River Commission Executive Director, Laura Hanson, introduced Councilman and immediate past Chair of the Jordan River Commission Chris McCandless from Sandy City, Councilman Trent Staggs from Riverton City, and current Board Chair and Salt Lake County Council Member Aimee Newton. Ms. Hanson gave the Council a brief overview of who they are and what they do. She reported that in 2008 a document was produced called the Blueprint Jordan River that outlined a very broad, ambitious vision for the river corridor. It recognized that there are many different stakeholders involved in the river corridor. Those who participated in the process asked for a framework and structure to help facilitate its implementation. The Jordan River Commission was formed in August of 2010. Ms. Hanson was hired in March of 2011 and currently their membership includes 13 cities, three counties, two state agencies, two districts (UTA and the Jordan Valley Water Conservancy District), nine known governmental community partners (including Workers Compensation Fund, Zions Bank, Rocky Mountain Bank, and Chevron), and non-profit groups.

Ms. Hanson reported that they have pending members they are working with including Midvale, Murray, Lehi, and Bluffdale. A financial contribution is required to participate and is based on a specific formula designed to reach an equitable and objective method for determining the proportionate amount for each city based on their specific circumstances and size. The Jordan River Commission has no regulatory authority and is purely advisory in nature. The type of projects they typically do fall into the following three categories:

1. Physical projects;

2. Education and outreach; and

3. Technical Assistance.

Examples of work they have done was described. Ms. Hanson reported that they worked to obtain funding for the 9000 South tunnel a few years back as a result of a partnership with multiple cities. Most recently they collaborated with Jordan Valley Water Conservancy District and Salt Lake County to coordinate efforts to complete the trail segment in Bluffdale. Most recently, they obtained $1.2 million for a bridge to fill the last gap of the Jordan River Parkway Trail. They have the ability to bond as an organization; however, they have no assets to bond against.

Ms. Hanson observed that there is a lot of undeveloped land along the River Corridor. Their goal is not to micromanage the City but instead to guide land use development. They accomplish that by providing tools, resources, training, and recognizing good work. They drafted a document called the *Best Practices for River Front Communities*. Ms. Hanson explained that this is the extent of what they do in terms of land use regulation. They also have a training series where they bring together resource experts from across the nation to discuss specific planning topics.

In terms of education and outreach, Ms. Hanson stated that they have logged over 15,000 volunteer hours in projects along the river. They also hold an annual "Get into the River" Festival that is designed to help engage the community and raise awareness for the river corridor. They also do trail maps and school outreach. Last year they were fortunate to be able to award $750,000 in grants to local governments. An appropriation was received from the Legislature for Jordan River Improvement Projects. They hoped to be able to do that again in the future. They also do a significant amount of grant writing and have raised in excess of $1 million for local governments. In total, they have raised approximately $17 million for the river corridor.

Mayor Timothy was aware that a few cities recently joined including Riverton City who joined in November of 2014. He questioned why they did not join sooner and what had changed. Trent Staggs, a Member of the Riverton City Council, stated that he represents their District 4, which is the northeast quadrant of Riverton City. He noted that the eastern boundary of his district is the

Jordan River. People who live along the river pushed for improvement along their section of the trailhead. The Army Corps of Engineers developed ponds in the vicinity of 12600 South that had fallen into disrepair. With the City being short staffed and on a tight budget, they were not able to attend to that section of the river to the extent they could or should have.

There was interest among the citizens to take action. There had also been some concern in the past among the Council about some of the land uses and decision making that had taken place that they felt was unclear. Those issues had all since been addressed. Riverton City Attorney, Ryan Carter, reviewed the agreement and indicated that it was much better than what he had seen in the past because it was clear that it does not allow the Jordan River Commission to trump any ordinances or land use decisions that have been made by the city's governing body. With those assurances, they were comfortable. They also had a couple of projects they intend to do immediately. As a result of their $3,000 dues, they have seen a 10 fold return in the first year.

They were able to procure an Invasive Species Mitigation Grant with the help of Ms. Hanson and the Jordan River Commission's grant writing staff. They are now working with the Utah Department of Food and Agriculture to pursue a grant of $60,000 with the National Fish and a Wildlife Association. The grant will work in concert with the previous grant to mitigate weeds, restore the ponds, and bring vitality back to that section of the trail. Commissioner Staggs expected to see a 20 fold return on investment. He had found it to be of benefit to their community. He commented that Board Meetings are very inclusive and collaborative.

Mayor Timothy remarked that the developers along the Jordan River Trail have been good partners and he questioned the need for another level of bureaucracy. He believed Salt Lake County was doing a very good job and just needs a little participation. He asked if Bluffdale needs to join the Jordan River Commission to continue to receive help with restrooms and amenities in Parry Farms Park relative to the Jordan River Trail.

Chris McCandless described various advantages of the Commission and stated that it eliminates competition among cities. Their job is to help member cities better maintain their portion of the

river. Mayor Timothy stated that Bluffdale has tried to be collaborative regardless of whether they are a member of the Jordan River Commission. Mr. McCandless stated that applications are reviewed by the Members of the Commission and scored. He commented that it helps to be a member rather than a non-member.

Ty Nielsen reported that he works for West Jordan City in the Parks Department and they have a crew that performs weed abatement and works on trails. He asked how long West Jordan has been a member city and if they have obtained bonds to help maintain their portion of the trail. Aimee Newton was not sure how long they have been a member but stated that West Jordan City has definitely received help. Most of the grants they offer go to member entities. They also have a habitat restoration project where they helped raise $300,000 in grants. She reported that the national grant hit rate is 17 to 20 percent and they have been getting 61 percent of the grants they have applied for. Ms. Newton commented that they expect to be able to help the City in the future but there is no guarantee. They, however, have other resources such as the committee, which is made up of engineers and other professionals.

Alan Jackson asked what the cost of participation would be for Bluffdale. Ms. Newton stated that Bluffdale's contribution would be $4,382, which was based on 2010 population numbers. Mr. Reid commented that there are two cities that pay an average of $.06 per capita. Saratoga Springs and North Salt Lake pay nearly twice that. Bluffdale, however, pays 10 times that at $.57 per capita. It seemed to Mr. Reid that the cities with higher populations also get more opportunities for projects. To him, the calculation seemed more weighted to river frontage. He did not think the formula was fair to Bluffdale.

Ms. Hanson commented that one of the advantages Bluffdale has is that they have a long stretch of river that increases the river frontage portion of the formula. She explained that the formula is equally weighted across each of the criteria that include population, river frontage, and area. Bluffdale's cost is higher because they have a long section of river and a small population. Given the fact that their focus area is only the river corridor, there is a lot of growth potential. They want

to help the City capitalize on that growth and do it in a way that contributes to quality of life. She felt that Bluffdale would have a larger return on their investment. Mr. Reid commented that Bluffdale would only have 1 vote out of 30 and he had never seen that be fair.

Ms. Hanson commented that she has a small staff and the "squeaky wheel gets the grease". She encouraged Bluffdale to be the squeaky wheel if they choose to join. Mr. Reid stated that based on the size of staff, Bluffdale does not have the ability to assign a staff member to work with the Jordan River Commission.

Justin Westwood asked how funds are distributed. Ms. Hanson explained that none of the funds paid by Bluffdale would go to another city and would go toward operating expenses. She noted that their total annual budget is under $200,000. Every project they do is funded by a grant or donation. Ms. Hanson commented that she was not interested in changing the formula. Mr. Reid remarked that the formula is fair to everyone except Bluffdale. Chris McCandless remarked that it would be difficult to change the formula. He personally was aware of two parks he would like to help the City fund. He recommended the City join the Commission and resign if they feel it is not of value. He mentioned that he has been an advocate for Bluffdale for many years.

James Wingate asked about trail management responsibilities. Ms. Hanson agreed to address that issue with the other Commission Members.

3. PUBLIC FORUM

Neal Gatherum gave his address as 14902 South Castle Valley Drive and distributed the "Bluffdale Shed Epidemic" handout. He reported that based on recent census data, there are roughly 1,849 residential single-family dwellings in Bluffdale. Fifty percent of the single-family homes include an outbuilding or shed. The current setback regulations in the zone are 10 feet on the side and back. Over 300 homes in Bluffdale are currently in violation of the setback requirements. This equates to 15% of all homeowners and ultimately 1 of every 3 sheds in the City are in violation, including his. Mr. Gatherum showed photos of his home and shed. He

outlined his conditional variance request, which was the result of a slope that prohibits him from moving his shed.

Justin Westwood asked if the variance request should go before the Board of Adjustment before coming to the City Council. James Wingate felt that a discussion on shed dimensions was needed. Procedural issues were discussed. Mayor Timothy commented that the intent of the public forum is to hear the request. No decision could be made by the City Council tonight. He offered to follow up with Mr. Gatherum at the next "Meet the Mayor" night.

There were no further members of the public wishing to speak.

4. CONSENT AGENDA

4.1 Approval of the May 11, 2016 Meeting Minutes.

4.2 Preliminary Acceptance of Independence Plat E-5, and Beginning the Warranty Period.

4.3 Acceptance of Independence G-3 Park and Trails (West Pocket Park), Ending the Warranty Period.

4.4 Preliminary Acceptance of Wood Duck Hollow Phase 1, and Beginning the Warranty Period.

4.5 Approval of a Resolution Approving a Franchise Agreement by and Between Wirelessbeehive.com, LLC, dba Beehive Broadband, and the City of Bluffdale.

Ty Nielsen moved to approve the consent agenda. James Wingate seconded the motion. Vote on motion: Alan Jackson-Aye, Ty Nielsen-Aye, Justin Westwood-Aye, James Wingate-Aye, Boyd Preece-Aye. The motion passed unanimously.

5. Presentation of the Police Quarterly Statistical Report, Sergeant Shane Taylor.

Police Chief, Andrew Burton, displayed a photo of the Saratoga Springs Police Department. He expressed appreciation for the Council and staff participation on behalf of Bluffdale City at the awards luncheon. Chief Burton reported on events that have occurred since the last report and

highlighted the Saratoga Springs Police Department activities. A recent officer involved critical incident was discussed. Chief Burton reported that several special events are coming up that they look forward to supporting. They participated in various trainings during the last quarter and several transitions were made. In May, they conducted a SWAT training at Camp Williams where they hosted the Unified Police Department's SWAT Team. Their sniper team, which Sergeant Shane Taylor is a part of, provided excellent training. The Trainer is a retired sergeant from the West Jordan Police Department and a retired Master Sergeant from the Air Force's Special Forces Unit.

Chief Burton reported that on the Saratoga Springs side they recently added 2.6 new officer positions. That is important for Bluffdale because their resources do not significantly support Saratoga Springs and they have to maintain enough manpower on their side to not have that be the case. They recently transitioned to the 9mm pistol from the 40 caliber. This was based on several studies that were conducted nationwide and a recommendation from the FBI based on a study that showed that in police shootings, police officers are more accurate with a 9mm than a 40 caliber. That is important in terms of liability for cities and police departments. They were able to make the transition and changed out approximately 45 pistols.

After trade-in they received about $20,000 worth of pistols for $3,000. Many of the guns needed to be replaced anyway. Rifle sights were next discussed that were valued at approximately $280. Chief Burton mandated that the department's rifles be set up with both electronic sights and iron sights. Every officer is required to qualify using both. It turned out that there was a lawsuit again EO Tech regarding the electronic sights that was heat or cold related. They were able to trade the sights in directly to EO Tech. They are swapping out all of the sights for a version that does not have issues. Chief Burton reported that they went from a sight valued at $280 to a $650 sight at no cost to the department.

Chief Burton reported that a diagnostic physical fitness test was to take place later in the month. He explained that goals and standards are set that officers are encouraged to meet. Progress is

assessed and officers are tested every few years. In the three years Chief Burton has been with the department, the officers have asked for a new shoulder patch. Recently, he led a committee of officers who put together recommendations for uniforms. They went in to the design process and ended up with a new shoulder patch, which was displayed.

Chief Burton reported that a new unit was created with a new sergeant position in the Special Services Unit. There is also a Sports Services Unit that has a part-time Logistics Manager who works 20 hours per week and is a retired Unified Police Department Sergeant. Chief Burton was thanked for keeping up on the potential liability issues with equipment.

Sergeant Taylor presented the 1st quarter statistical report. He introduced New Officer, Jared Chuchran, who recently completed the Unified Police Department's Motor School Course. Officer Chuchran was described as very competent and capable. Officer Andres "Gian" Gianfelice was also recently hired. He is the father of five and an avid hunter. He served nine years with the American Fork Police Department graduating at the top of his class at Utah Valley University, is fluent in Spanish, has 2 ½ years' detective experience, and is a motor officer. Mr. Reid asked Officer Gianfelice how Bluffdale's equipment compares to American Fork's. Officer Gianfelice commented that it is top notch. He commented that he is happy to be in Bluffdale.

Sergeant Taylor reported on the overall statistics for the 1st quarter and stated that the hours volunteers spent serving the City had increased. He commended the volunteers for their efforts. He commented that if they had been paid for their time, it would have equated to just over $2,000. A sample coloring book to be given out during Old West Days was distributed for the Council's review. Other items included wrist bands, suckers, and badges.

Chief Burton commented that the gunlocks and color of the police cars were at the discretion of the City Manager. He recommended, however, that Mr. Reid consider the black and white motif from a safety and visibility standpoint.

6. Presentation of Child Safety Concerns at Bluffdale Elementary, Presenter, Adrienne Donner, Chair, Community Council.

Bluffdale Elementary School Community Council Chair, Adrienne Donner, reported that part of what they do is put together a Student's Neighborhood Access Plan "SNAP" plan. The plan identifies issues that concern the school and children with the involvement of both staff and parents. They write to Bluffdale City every year with issues and concerns they would like the Council to be aware of. Over the past few years they have requested a few items that are growing in urgency. They asked that the City take a portion of the school's property to construct a walking path from the park to the new County Park. A map was distributed showing areas of concern. Their primary concern was the area in front of the school on 2700 West. At either end there are crosswalks and immediately following them are signs that say "End School Zone". In the middle section, cars speed up to 35 mph while there are still students present and cars going in and out of the parking lot. Ms. Donner asked that a few signs be placed on either end so that the zone is longer.

Mayor Timothy stated that the signs were posted based on a requirement from another organization. City Engineer, Michael Fazio, reported that he conducted research and stated that the distance is not specified and gives some leeway to the engineer to decide where to post the sign. The Mayor directed Mr. Fazio to analyze the situation and have City Attorney, Vaughn Pickell, research it from a state perspective.

Ms. Donner referenced page eight pertaining to tree trimming and stated that currently the trees block visibility and are impeding clearance. Ty Nielsen stated that he is a City Forester by profession and encouraged the public to take action when they see a situation and call City Hall who has an Arborist on staff who can trim the trees.

Ms. Donner requested that a solar powered speed sign be posted as motorists approach the school zone. The intent was for it to serve as a reminder. The Mayor commented that mobile signs were

recently purchased by the Police Department and are much more effective because they can be moved around so that motorists don't get used to them.

There was next discussion of the sidewalk on 2200 West from 15000 South to 14400 South, which Ms. Donner described as "spotty". She explained that a lot of children in the area walk to school. Mayor Timothy stated that the City is aware of the situation and it is designated as an upcoming project. He also noted that the road and sidewalk would be done together. When the road rehabilitation is complete; sidewalk, curb, gutter, and drainage will be put in as well.

Mr. Reid commented that even though installing curb, gutter, and sidewalk is an improvement considered for impact fees, it is difficult to qualify 2200 West as needing improvement as a result of additional traffic and growth. Mayor Timothy asked if there were any available state sidewalk grants. Mr. Fazio stated that staff was working on that. Procedural issues were discussed.

Mr. Reid stated that there are certain projects for which funding is available. Road projects, however, are difficult because the City is in the middle of three large road projects and recently completed three others.

The Council expressed appreciation for Principal Eagan and the wonderful teachers at Bluffdale Elementary.

7. Consideration and Vote on a Resolution Approving a Reimbursement Agreement for Westgate Partners, LLC, Regarding Transportation Impact Fees for Construction of Noell Nelson Drive, Staff Presenter, Vaughn Pickell.

Mr. Pickell reported that the Council Members were provided with a copy of a Reimbursement Agreement to reimburse the developer for construction of Noell Nelson Drive. If passed by the Council, work was to begin the following day. Mr. Pickell indicated that the contract amount was attached to the plan.

Ty Nielsen moved to approve a resolution approving the execution of a Reimbursement Agreement for Westgate Partners, LLC, regarding the Transportation Impact Fees for

construction of Noell Nelson Drive. Alan Jackson seconded the motion. Vote on motion: Alan Jackson-Aye, Ty Nielsen-Aye, Justin Westwood-Aye, James Wingate-Aye, Boyd Preece-Aye. The motion passed unanimously.

8. Presentation and Discussion on the Final Budget for the 2016-2017 Fiscal Year, Staff Presenter, Stephanie Thayer.

Mr. Reid reported that the Council was provided with the most current version of the budget. Accountant/HR Administrator, Stephanie Thayer, reported on the summary of changes made since the last meeting. The first change pertained to potential salary increases for the City Council and Mayor. Mayor Timothy proposed increasing the Council Member salaries to $600 per month, which represented an increase of $200 per month. It was recommended that Planning Commission salaries remain unchanged. Ty Nielsen wanted to see the salary figures from neighboring cities before taking action. Alan Jackson stated that they are much higher though it would be good information to have. Mayor Timothy stated that he would have gone higher on salaries but the City Council has denied his requests before but he thought it was needed.

Alan Jackson indicated that it does require a great deal of time to serve on the Council and could become a deterrent in the future in terms of deciding whether or not to participate. Ms. Thayer stated that on June 22 the Council will need to make a final decision and pass the budget. Mr. Kartchner commented that the Mayor has gone a number of years without an increase in pay and is also below the average. At the next meeting, Mr. Reid would bring salary comparisons for both the Council and the Mayor.

Mr. Reid reported that at the last meeting there was discussion about an increase for the Fire Department and Ambulance. The department requested a 5% increase and they settled on a 3% increase for all staff.

In the Streets budget a full-time Streets Worker was added. This will help offset the cost and need for a street sweeper. Mr. Reid indicated that he spoke to a Water Department employee earlier in the day and stated that they use the street sweeper extensively because of the large vacuum it has

on it. This year they have budgeted to purchase and build a back trailer that will help the Water Department perform various duties that the street sweeper was used for other than street sweeping. This will free up the street sweeper to be dedicated to street sweeping.

The Engineering budget was increased too much and was reduced by $15,000. With regard to the float, the budget was increased by $2,500 for a complete float redesign with the new logo. Mr. Reid stated that for the last six years the budget has remained the same and Modern Display has had ongoing complaints. One year the float was borrowed from someone in Utah County that had spent $20,000 on it.

With regard to Old West Days, Ms. Thayer stated that a $10,000 increase is requested. She noted that there is currently $8,000 in reserve. Mr. Reid explained that for several years there has been a $30,000 budget and there has been no increase. A very good job has been done of raising funding from sponsors and ultimately a reserve of $80,000 was built. A decision needed to be made by the Council in terms of the level at which they would want to keep the reserve. If they decide that they have the ability to contribute extra, they could ask the Old West Days Committee how they could enhance the event with more funding. Mr. Reid reported that the Bluffdale Arts Advisory Board has a negative reserve balance and the Rodeo and Miss Bluffdale both have small reserves. He considered $80,000 to be substantial. He thought it would be appropriate for him, Mr. Kartchner, and the Old West Days Committee to discuss their five-year plan.

It was reported that the cost of Old West Days for one year is $91,000. It was recommended that a determination be made by the Council with regard to what the amount in the reserve should be. One suggestion was that it be one year's operating expenses. Mr. Reid reported that in this year's budget they have included a $10,000 increase to the amount transferred from the General Fund to Old West Days from $40,000 from the previous $30,000.

Ms. Thayer reported that the Bluffdale Arts Advisory Board has a negative reserve. They requested an increase with the transfer from the General Fund to $13,000. There had been discussion about increasing it to $15,000 so that it is not in the negative. This would represent a

$6,000 increase from the prior year of $9,000. Mayor Timothy commented that the Bluffdale Arts Advisory Board put in a great deal of work for performances and training and commit their homes, yards, and garages. For them to fundraise is difficult because they are already committing a substantial amount of time. It was suggested that they find better avenues to advertise and increase ticket sales.

Park Impact Fees were next discussed. Ms. Thayer stated that further discussion was needed. Mr. Reid reported that impact fees primarily fund parks. Currently, the major source of impact fees is Independence who has five different owners, two of which are very active. The Bluffdale Heights Subdivision has a fourth phase coming on but it will not generate a great deal in terms of impact fees. The DAI portion of Independence included an agreement that all of the funds generated must be spent in that portion of Independence. As a result, there will be very nice facilities there with a large amount of growth. On the Aclaime side, which consists mainly of Westgate, Marketplace, and soon the Day property, 85% of the funds will remain in those areas and 15% will be directed to City-wide projects. Going forward it will be important to identify the areas where funds are generated and how much will be spent in each area.

The three large projects outside of Independence were described as:

- Parry Farms Park. Mr. Reid stated that major progress was made on this park last year. The estimated cost to complete it this year was $450,000.

- Vintage Park. Mr. Reid stated that the park is located on Loumis Parkway just below the Bluffs Apartments and the new church that is going in. Money has been allocated for the cost and the design and will be presented to the Council for input. The initial cost was estimated at just under $2,000,000. Mayor Timothy asked if there is an intent to integrate and access Smith's in the Gateway. Mr. Reid responded that there is. City Planner/Economic Development Director, Grant Crowell, commented it was easier to accomplish than originally thought.

- Rodeo Arena. Mr. Reid reported that approximately $100,000 has been spent on a retaining wall and guard rail. Staff met with a bleacher manufacturer and asked for different levels of pricing. Currently, the west side bleachers seat just under 2,000. They are constructed of wood and need to be replaced. They also are not ADA compliant. $2,000 was recently spent to repair wood sections for upcoming events. The Arena and Rodeo Committees reviewed the proposal and made various requests. A drawing was submitted showing what the arena will look like. The Council was asked to share their vision of the arena. The three levels of bleacher pricing were for 3,300 to 3,400 seats, 4,000 to 4,300 seats, and a 5,000-seat version. Staff was awaiting a response from the manufacturer on pricing. The initial prices showed that the cost of the 5,000-seat option was $1.65 million.

Mr. Reid stated that there was discussion about whether to put a roof on the facility. He explained that the roof protects the equipment, however, most people are used to arenas that do not have roofs. In the event of rain, most people stay home regardless of whether the facility has a roof or not. A determination was made to look at the cost savings, which is $200,000 to $300,000 to exclude the roof and likely more as the seating level is increased. The final decision would be made by the Council. It was noted that the roof would be constructed of aluminum and the seats would be a mixture of individual seats and benches. There would be 800 individual seats in the premium area in the front, benches with backs in the center, and benches with no backs on the upper portion.

Staff agreed to submit additional drawings to the Council for review. A question was raised about whether a roof could be added later without having to tear anything down. Mr. Reid stated that it is a decision on cost the Council will have to make. A substantial amount of money could be saved by eliminating the roof or building the structure without a roof and putting more toward the size of the beams so that a roof could be supported later. Another option was to make a decision to do it all at once. Much of the decision will be based on the available funding. That had not yet been determined.

Mr. Reid stated that staff was looking for direction from the Council before going back to the committee. It was noted that a great deal of time and effort had been invested in coming up with the current drawings. The original cost estimate was $3.9 million for the 5,000-seat facility, ticket stands, restrooms, and concession stands. What was being discussed tonight was only the bleacher portion of the improvements. It was noted that the most critical decision is whether it will be a community venue for horse enthusiasts or more diverse in terms of accommodating larger events such as concerts. Mr. Reid stated that with 5,000 seats, it can serve as a regional events center. The comment was made that it does not make sense to build a 5,000-seat facility for use on weekends by people for riding horses. It seemed more sensible to construct a 5,000-seat facility for concerts.

Mr. Reid stated that the Council could move forward on Parry Farms and delay the Arena and Vintage Park discussions until next February or July. The current bleachers have gaps in the back to accommodate the concession stands and/or restrooms underneath the back portion. He noted that they have a beam structure rather than a lattice structure. Mayor Timothy commented that that would be good for parking. Mr. Reid proposed that they complete Parry Farms and budget for the rodeo arena starting in July and then in February come back with the Vintage Park request knowing that the cost is $2,000,000. At that time, they could consider the Arena and determine how far out to phase it. The Council expressed support for that option.

Alan Jackson commented that things can be done to the Rodeo grounds to make it look better without spending a lot of money. Mr. Reid stated that they have agreed to move forward on the Rodeo Blend and the Black Widow. He had also looked at tractors and found a 100 horse power plain tractor for $21,000. He noted that the existing tractor does not have a cab or front end loader. To add those options increases the cost to $50,000. A newer model costs $75,000. He had never priced a new one. Mr. Dietrich reported that John Deere may have a lease option on a tractor. It was mentioned that the grounds are groomed daily.

Ms. Thayer next addressed capital projects and the Veterans Memorial. Mr. Reid stated that staff received a call from a scout who thinks he has located what may be a centerpiece for the Veterans Memorial. He was not sure of the cost but added $6,000 to the budget for that expense.

Ms. Thayer reported on modifications made to the Capital Projects budget and stated that some items were removed as a result of discussion from last meeting. Input from the Council was desired with a decision needed at the next meeting. The salter was removed from the budget, however, at the advice of Mr. Dietrich the $7,000 expenditure was added back in.

In the Water Fund there was discussion of equipment items. A determination was made that they were probably necessary and they were left in the budget for the time being. Mr. Reid and Ms. Thayer were asked to email the budget document in Excel spreadsheet format to the Council for review. The Council was asked to give input to staff prior to the next City Council Meeting.

Ms. Thayer stated that she looked at property tax information for the Certified Tax Rate from the State Auditor on June 17. She agreed to provide the rest of the documents to the Council in advance of the next meeting. With regard to Park Impact Fees, Mayor Timothy suggested budgeting $450,000 for Parry Farms and leaving some to begin design work on Vintage Park. He recommended everything else be removed.

With regard to the bleachers, Mayor Timothy recommended more time be spent making sure they do the right thing. By February of 2017, he hoped to have a firm answer on what the options are. In terms of parking, it was noted that for a 5,000-seat facility, 600 parking stalls would be required. Mr. Reid stated that parking should be available in the school parking but if not, the church parking lot or the parking lot in the new park can be utilized. Even though both are used, a decision needs to be made without counting them.

Participation in the Jordan River Commission was discussed. Alan Jackson stated that he had always been in favor of it but in the past it has not been approved. Mr. Reid objected to how much Bluffdale has to pay compared to other cities but commented that it is only $5,000 per year.

Mayor Timothy stated that even if there is no financial gain to the City the political benefits alone will be worthwhile. In addition, a representative from the City would need to participate. Alan Jackson volunteered to serve in that capacity.

Mr. Reid commented that crossing guards need to assigned for the various school schedules.

LOCAL BUILDING AUTHORITY OF THE CITY OF BLUFFDALE BOARD MEETING

1. Roll Call.

All Members of the Local Building Authority were present.

2. CONSENT AGENDA.

2.1 Approval of the May 11, 2016 Meeting Minutes.

Ty Nielsen moved to approve the consent agenda. James Wingate seconded the motion. The motion passed with the unanimous consent of the Board.

3. Presentation and Discussion of the Final Budget for the 2016-2017 Fiscal Year, Staff Presenter, Stephanie Thayer. (LBA FY2017 Final Budget Discussion Held in Conjunction with the Final Budget Presentation and Discussion).

The above matter was addressed as part of the Regular Meeting.

4. Adjournment.

The LBA Meeting was adjourned.

BLUFFDALE CITY REDEVELOPMENT AGENDA BOARD MEETING

RDA Chair, Ty Nielsen, assumed the Chair.

1. Roll Call.

All Members of the Bluffdale City Redevelopment Board were present.

2. CONSENT AGENDA.

2.1 Approval of the May 11, 2016, Meeting Minutes.

Mayor Timothy moved to approve the consent agenda. Alan Jackson seconded the motion. The motion passed with the unanimous consent of the Board.

3. Presentation and Discussion of the Final Budget for the 2016-2017 Fiscal Year, Staff Presenter, Stephanie Thayer. (LBA FY2017 Final Budget Discussion Held in Conjunction with the Final Budget Presentation and Discussion).

The above matter was addressed as part of the Regular Meeting.

4. Adjournment.

The RDA Meeting was adjourned.

CONTINUATION OF BUSINESS MEETING

Mayor Timothy resumed the Chair.

9. Mayor's Report.

Mayor Timothy reported that some cities wanted to form a focus group of mayors to make funding a higher priority for the Mountain View Corridor as opposed to Bangerter Highway. With the needs and wants, it was determined that the current ratio is satisfactory.

The Mayor indicated that a committee has been established to study a road from Salt Lake County over the mountain to Tooele County. There was no forethought on where it should be. The study was simply to address the possibilities. The funding allocated for the study was very narrow. Mayor Timothy and Mayor Applegarth recommended studying at least to Bangerter Highway.

10. City Manager's Report and Discussion.

Mr. Reid reported that the Demolition Derby was scheduled for the following Saturday. Appreciation was expressed to the Lions Club for providing tickets to the Council.

The Council was updated on the City Hall Project. Mr. Reid reported that the floor has been poured and the backfill along the walls was near completion. In the near future they will connect to the sewer and put the iron or steel in for the beams and floors.

Mr. Reid reported that a Porter Rockwell Boulevard Segment 3 Construction Meeting was held recently. The project has commenced with a schedule to finish by next summer.

Mr. Reid indicated that staff met with a developer about the Fire Station in Independence and a potential property donation. The donation would give the current owner a tax deduction and provide the City with property on which to construct a Fire Station. He considered that to be a critical part of the Fire Station for the City to afford it.

With regard to Noell Nelson Drive, the Funding Agreement was approved earlier in the meeting. The following day, a Construction Meeting was to take place. The intent was to complete the project before October 15 when the asphalt plants close.

Mr. Reid reported on the City's website and stated that it will go live one week from Friday. They now have the ability to make adjustments on the fly. Council Members who identify changes to be made were encouraged to contact staff. Mayor Timothy suggested the website go live the following Monday instead of Friday.

Mr. Reid stated that he and Mr. Fazio have been meeting with representatives from Aclaime and the Jordan School District about the location of the Jordan School District properties in the Day area of Independence. The meetings were ongoing. The direction from the City was that they do not care particularly about where the school is located but they would like to keep the tracks crossing open, if possible. The City's preference was to have the elementary school as close to DAI as possible. Mr. Reid stated that the further south it is the better so that there is not a lot of traffic to the Westgate property neighborhoods. Mr. Reid noted that DAI owns property in the area as well.

It was reported that staff is working on the Capital Facilities Plan and hope to hold a meeting the following week. A meeting was scheduled the following morning with DAI to discuss parks and upcoming parcels in Independence. There was a dispute about how much of the extreme sloped area to purchase. An arbitrator was coming in to sit in on the initial discussions.

Mr. Reid reported that there are more inspections in Bluffdale than the City can keep up with. They have had an ongoing relationship with Forsgren Engineering who has served as the Backup Inspector when the City's Inspector gets overwhelmed or takes time off. Forsgren recently informed staff that their workload is such that they can no longer assist the City. As a result, staff presented a formal agreement to Kimball Engineering for backup inspection services. Sunrise Engineering was also being considered. Their rate is $65 per hour, which was considered very reasonable for building inspection services. James Wingate mentioned that Todd Nelson (Noell Nelson's son) works for Skyline Engineering and may be able to help. Mr. Reid agreed to look into that option.

PLANNING SESSION

James Wingate commented that about one week ago there was an alleged cougar sighting at the entrance to Spring View Farms on the south side of 14600 South. There was some question as to the validity of the sighting. Mayor Timothy stated that cougars are occasionally seen in Bluffdale on the canal roads.

Council Member Wingate reported that UDOT is changing the requirements for how to submit B&C Roads to seek funding. A workshop was held earlier in the week throughout the state. Going forward they will require validation through map GIS data rather than just a spreadsheet showing road mileage.

Boyd Preece was interested in taking on the issue of interchange development. He reported that he has observed success when developers have become political. He offered to take the issue on if there are no other strategies in place. Mr. Reid expressed support on behalf of staff.

It was reported that Smith's Marketplace changed the bid date to June 20. The groundbreaking was also moved to August.

Resident, Dan Capel, reported that there is a City ordinance pertaining to accessory dwellings as part of principal residences. The ordinance requires a number of things including that accessory dwellings be connected to the primary residence and have an inside connection. Mr. Capel was aware of a number of properties in Bluffdale that have shops with apartment units. Before going through the process and requesting a change to the ordinance, he asked if there were strong feelings among the Council with regard to separating units and allowing accessory apartments to be separate from the house. Mr. Capel stated that he has aging parents who will eventually need housing. To help them feel more independent and to address cost concerns, it would be better to include the accessory dwelling as a second story of his garage.

Mayor Timothy stated that one of the reasons for requiring accessory dwellings to be attached is that parking would most likely occur in the garage or driveway rather than in the area between two adjacent buildings. Mr. Kartchner stated that he was on the Council when the matter was discussed extensively, and that specific clause was primarily designed to discourage what is proposed since it essentially increases the density to two units per acre. Having the two be connected would result in the homeowner being inclined to have someone that is trusted, such as parents or a family member, live in the home. The separation enables an accessory structure to be rented to anyone at which time it becomes two homes on one lot. Alan Jackson commented that the issue has been explored in the past and has never gotten much support. Boyd Preece expressed a similar concern and commented on how the situation would be handled for a future homeowner who would be able to rent the accessory dwelling to anyone.

Mr. Crowell stated that he has received numerous calls about this issue and there appears to be a great deal of interest. Mr. Reid agreed and stated that there will also be a lot of opposition. Alan Jackson stated that at some point it becomes an enforcement issue. Mr. Reid recalled that the original discussion about detached garages, plumbing was not allowed in order to prevent them

from being converted to apartments. They moved away from that since it is convenient for property owners to have a restroom in a garage because in many cases it is set back from the home. Unfortunately, this leads to violations. Mr. Capel appreciated the input from the Council and stated that he was not yet ready to take action.

11. Closed Meeting Pursuant to Utah Code §52-4-205(1) to Discuss the Character, Professional Competence, or Health of an Individual, Collective Bargaining, Pending or Imminent Litigation, Strategies to Discuss Real Property Acquisition, Including Any Form of a Water Right or Water Shares, Security Issues, or any Alleged Criminal Misconduct.

Justin Westwood moved to go into Closed Meeting to discuss pending or imminent litigation. Ty Nielsen seconded the motion. The motion passed with the unanimous consent of the Council.

The Council was in closed meeting from 9:49 p.m. to 10:16 p.m.

12. Adjournment.

The City Council Meeting adjourned at 10:16 p.m.

_____
Wendy L. Deppe, CMC
City Recorder:

Approved: _____

DRAFT - FOR DISCUSSION PURPOSES ONLY

BLUFFDALE CITY COUNCIL
CLOSED MEETING MINUTES
Wednesday, June 8, 2016

Present: **Mayor Derk Timothy**
Alan Jackson
Ty Nielsen
Boyd Preece
Justin Westwood
James Wingate

Staff: **Mark Reid, City Manager**
Vaughn Pickell, City Attorney
Grant Crowell, City Planner/Economic Development Director
Blain Dietrich, Public Works Operations Manager
Michael Fazio, City Engineer
Bruce Kartchner, City Treasurer
Brittany Skinner, Assistant City Attorney
Wendy Deppe, City Recorder

At approximately 9:49 p.m. Mayor Derk Timothy called the meeting to order.

Motion: Justin Westwood moved to go into Closed Meeting to discuss pending or imminent litigation.

Second: Ty Nielsen seconded the motion.

Vote on Motion: The motion passed with the unanimous consent of the Council.

Pending or imminent litigation issues were discussed.

The City Council returned to the City Council chambers to resume the open portion of the meeting at 10:16 p.m.

_____
Wendy L. Deppe, CMC
City Recorder

Approved: _____

Agenda Item 3.2

BLUFFDALE

14175 Redwood Road, Bluffdale, Utah 84065; Tel. 801-559-7781; mfazio@bluffale.com

Memo

Date: 6 July 2016

From: Michael Fazio, P.E.

To: Mark Reid, City Manager
Mayor Timothy
City Council

CC:

RE: Agreement with Rocky Mountain Power for the Relocation of Two Power Poles on Porter Rockwell Segment 3

The City Council approved the relocation of the two large power poles that are within the Porter Rockwell Boulevard Segment 3 alignment for the design and cost of the relocation. This agreement with Rocky Mountain Power stipulates that Rocky Mountain Power relocates the poles in the alignment selected by the City and the City compensate Rocky Mountain Power $710,915 for the relocation costs. The agreement establishes all other terms and condition for this contract.

The City staff has reviewed the agreement. I recommend approving the agreement and authorizing the City Manager to execute the agreement.

CC#: **Order**

CONSTRUCTION AGREEMENT FOR RELOCATION WORK BETWEEN ROCKY MOUNTAIN POWER AND

THE CITY OF BLUFFDALE

This CONSTRUCTION AGREEMENT FOR RELOCATION WORK ("Agreement"), is by and between PacifiCorp, an Oregon corporation doing business as Rocky Mountain Power ("Rocky Mountain Power"), and The City of Bluffdale, a Utah municipal corporation ("Requestor"), for work to be performed in relation to the installation of certain Rocky Mountain Power facilities located in or near Porter Rockwell Boulevard, Bluffdale City, Salt Lake County. Rocky Mountain Power and Requestor are each sometimes referred to herein as "Party" or collectively as "Parties."

WHEREAS, Requestor now seeks to induce Rocky Mountain Power to perform the work necessary to relocate a section of the Camp Williams to Lone Peak 138kV subject to all the terms and conditions of this Agreement; and

WHEREAS, Rocky Mountain Power now agrees to perform the work necessary to install the new facilities as an accommodation to Requestor, subject to all the terms and conditions of this Agreement;

NOW, THEREFORE, the Parties hereto agree as follows:

SECTION 1: DEFINITIONS

"Completion Date" means the date upon which Rocky Mountain Power has installed the New Facilities.

"Estimate" means the lists of New Facilities attached hereto as Appendix A, respectively, and the non-binding estimate of the amounts Rocky Mountain Power will charge Requestor to install the new facilities, as set forth in Section 3.1 (the "Estimated Costs"); Requestor will bear the full cost of such work, determined upon completion, subject to the terms and conditions of this Agreement.

The new facilities are identified in Appendix A. Appendix A contains only an outline of work to be performed under this Agreement.

"Project Costs" means all reasonable costs, charges and expenses incurred by Rocky Mountain Power in performing the Work. The Project Costs shall include but are not limited to Rocky Mountain Power's internal costs, overhead, expenses, cost of supplies and construction materials, costs for the use of its capital (which shall be the sum of the Capital Surcharge and the AFUDC charge rates determined by Rocky Mountain Power's SAP accounting system, applied to costs invoiced in the billing period), project management, inspection and engineering services costs at hourly rates determined by Rocky Mountain Power's SAP accounting system, and attorneys' fees. The Project Costs shall include taxes or estimated taxes due on contributions in aid of construction, if any. Project Costs includes, without limitation, the amount Rocky Mountain Power pays to Rocky Mountain Power's contractors, vendors and other third-parties, and any other amounts owed to Rocky Mountain Power under the terms of this Agreement.

“Replacement Facilities” means the facilities which Rocky Mountain Power determines are required to replace the Existing Facilities, in Rocky Mountain Power’s reasonable sole discretion. The Replacement Facilities have been generally identified in the course of developing the Estimate and are listed in Appendix B, but may be more specifically identified in the course of performing the Work as those facilities evolve through design and construction. Appendix B contains only an outline of work to be performed under this Agreement.

“Work” means the installation of the Replacement Facilities and the subsequent removal of the Existing Facilities, and includes but is not limited to obtaining regulatory approvals and rights of way, permitting, engineering, design work and design review, procurement and construction, and approving or rejecting, testing, and inspecting such work; the Work includes all other activities performed in furtherance of the purposes of this Agreement.

SECTION 2: PURPOSE; COMPLETION; TERM

2.1 Purpose. This Agreement sets forth the terms and conditions by which Rocky Mountain Power agrees to perform the Work and requestor agrees to pay for the Work. Rocky Mountain Power shall solely manage Rocky Mountain Power’s employee’s, contractors, subcontractors and vendors with respect to the Work.

2.2 Scope of the Estimate. Rocky Mountain Power has used commercially reasonable efforts to develop the Estimate; however, the Estimate is at best an approximation due to a number of factors that cannot be determined at this time or which may be subject to change. As a result, the Estimate does not take into account all potential factors, for to do so would (a) require significant additional detailed design, engineering, and rights of way work; (b) would add considerably to the cost of the Estimate; and (c) would take substantially longer to develop; or (d) would require a substantial cost contingency to be added to the Estimate. Accordingly, has provided the

estimate based a reasonable analysis of known conditions, and the actual cost of performing the Work is very likely to differ from the Estimate.

2.3 Estimated Time of Completion. Rocky Mountain Power shall use commercially reasonable efforts to complete the Work on or before _____, 2016, which date may be revised from time-to-time by written mutual consent of the Parties, such consent not to be unreasonably withheld. Rocky Mountain Power shall not be liable for delays in completing the Work. In those instances where by reason of unanticipated events or emergencies which cause power outages or threaten Rocky Mountain Power's ability to continuously provide electric service as it is required to do by law or by contract, then Rocky Mountain Power personnel assigned to perform the work may be withdrawn from the work until such time as the unanticipated event or emergency is concluded. In the event that Rocky Mountain Power personnel are removed from the work in response to such an event or emergency, then the estimated time for completion of the work shall be extended by a period of time equal to that period from the time the personnel are removed from the work until they are available to resume the work, plus forty-eight (48) hours.

2.4 Term of Agreement. This Agreement shall be effective upon the date executed by both Parties, and shall remain in effect through the Completion Date. In any case, this Agreement shall continue in effect until each Party has satisfied its obligations to the other, including without limitation any payment obligations and, shall continue in effect to the extent necessary to provide for final billings, billing adjustments, and the determination and enforcement of liability and indemnification obligations arising from acts or events that occurred while this Agreement was in effect.

2.5 Third-Party Relocation Costs. The Estimate does not contain an estimate of third-party relocation costs. The Work does not include relocating or arranging for the relocation of third-party facilities of any kind. Requestor shall be solely responsible for obtaining cost estimates from any third-parties attached to the Existing Facilities or situated within the right-of-way, and Requestor shall be solely responsible for making all necessary arrangements to transfer third-party facilities to the Replacement Facilities, or any alternative arrangements necessary to accommodate all such third-parties.

2.6 Access to and Ownership of Rocky Mountain Power Facilities. Requestor shall not have physical access to Rocky Mountain Power’s electric facilities or any of the Work and shall engage in no activities on or related to Rocky Mountain Power’s electric facilities or the Work. The Existing Facilities and the Replacement Faculties shall at all times be and remain the property of Rocky Mountain Power. Rocky Mountain Power shall design, construct, install, and operate the Replacement Facilities in accordance with standards of Rocky Mountain Power’s sole choice. Neither Requestor nor any other

person shall have the right to operate or maintain Rocky Mountain Power's electric facilities or the Work.

2.7 Rights-of-Way. Rocky Mountain Power shall select the right-of-way for all necessary lines with the cooperation of Requestor. For no remuneration or consideration other than Rocky Mountain Power's execution of this Agreement, Requestor shall grant Rocky Mountain Power such easements across Requestor's property and the property of third parties, and Requestor shall prepare in a form satisfactory to Rocky Mountain Power and shall tender to Rocky Mountain Power all instruments, documents, and writings necessary or useful in routing and constructing the lines, including but not limited to all necessary rights-of-way, licenses and easements, or Rocky Mountain Power may elect to procure such rights-of-way, licenses and easements at the Requestor's expense. In every case and at all times, Rocky Mountain Power's receipt of satisfactory rights-of-way, licenses and easements is a condition precedent to Rocky Mountain Power's obligation to perform the Work.

2.8 No Dedication of Facilities. The undertakings of Rocky Mountain Power under this Agreement are rendered strictly as an accommodation and do not constitute the provision of a public utility service, or the dedication of all or any portion of the Rocky Mountain Power electric system to Requestor, the public, or any third party.

SECTION 3: COST OF THE WORK

3.1 Estimated Costs. Rocky Mountain Power estimates that the total Project Costs will be approximately $710,915 (the "Estimated Costs"). In the event that actual Project Costs exceed such amount, Rocky Mountain Power shall provide written notice to Requestor and Requestor shall be responsible for the cost of additional work performed. Requestor shall pay Rocky Mountain Power for all Project Costs incurred, subject to the terms of this Agreement.

3.2 Prepayment. Requestor shall tender payment in the amount of the Estimated Costs set forth in Section 3.1 upon executing the Agreement and Rocky Mountain Power's obligation to proceed with the Work shall be contingent upon receipt of such payment. In the event Rocky Mountain Power determines at any time that actual Project Costs may exceed the Estimated Costs, Rocky Mountain Power may require an additional prepayment or prepayments to cover the estimated cost of additional Work, and in such cases, Rocky Mountain Power's obligation to proceed with the Work shall be contingent upon receipt of such additional payment or prepayments. After the Completion Date, Rocky Mountain Power shall either (a) refund the amount of any prepayments in excess of actual total Project Costs, or (b) submit an invoice to Requestor for payment of any actual Project Costs in excess of the Estimated Costs, net of prepayments, and in that case Requestor shall pay Rocky Mountain Power amounts due

within thirty (30) days of the invoice date, together with interest at the lesser of a rate of 1.5 percent per month or the maximum lawful rate, on any amounts not paid within thirty (30) days of the invoice date.

SECTION 4: LIMITATIONS ON LIABILITY; WARRANTIES; INDEMNIFICATION

Under no circumstances shall either Party be liable to the other Party for any lost or prospective profits or any other special, punitive, exemplary, consequential, incidental or indirect losses or damages (in tort, contract or otherwise) under or in respect of this Agreement or for any failure of performance related hereto howsoever caused, whether or not arising from sole, joint or concurrent negligence; and without affecting any other limitations of this Agreement, each Party's liability to each other shall in every event be limited to the payment or refund of amounts due hereunder.

Rocky Mountain Power warrants that its work shall be consistent with prudent utility practices. ROCKY MOUNTAIN POWER DISCLAIMS ALL OTHER WARRANTIES, EXPRESS OR IMPLIED, INCLUDING BUT NOT LIMITED TO THE WARRANTY OF MERCHANTABILITY, FITNESS FOR PARTICULAR PURPOSE, AND SIMILAR WARRANTIES.

Requestor shall indemnify, defend, and hold harmless Rocky Mountain Power with respect to any claim that relies in any way on the Estimate. Requestor shall indemnify, defend and hold harmless Rocky Mountain Power and its officers, directors, agents, and employees and its successors and assigns from any and all claims, demands, suits, losses, costs, and damages of any nature whatsoever, including attorney's fees and other costs of litigation brought or made against or incurred by Rocky Mountain Power and resulting from, arising out of, or in any way connected with any act, omission, fault or negligence of Requestor, its employees or any officer, director, or employee or agent of the same and related to the subject matter of this Agreement. This indemnity obligation shall include, but not be limited to, loss of or damage to property, bodily or personal injury to, or the death of any person. Requestor's obligation under this provision of the Agreement shall not extend to liability caused by the sole negligence of the Rocky Mountain Power.

SECTION 5: FORCE MAJEURE

Neither Party shall be subject to any liability or damages for failure to perform their respective obligations hereunder to the extent that such failure shall be due to causes beyond the control of the Party claiming force majeure protection, including but not limited to the following: (a) the operation and effect of any rules, regulations and orders promulgated by any commission, municipality, or governmental agency of the United

States, or subdivision thereof; (b) restraining order, injunction or similar decree of any court; (c) war; (d) flood; (e) earthquake; (f) act of God; (g) sabotage; or (h) strikes or boycotts. The Party claiming Force Majeure under this provision shall make every reasonable attempt to remedy the cause thereof as diligently and expeditiously as possible. Provided, the obligation to pay amounts due shall not be excused by events of Force Majeure.

SECTION 6: MISCELLANEOUS PROVISIONS

6.1 Attorney's Fees. In any suit or action, arising out of or related to this Agreement involving a claim, counterclaim or cross-claim made by any Party against any other Party, the substantially prevailing Party shall be entitled to recover the costs and fees (including, without limitation, reasonable attorneys' fees, the fees and costs of experts and consultants, copying, courier and telecommunication costs, and deposition costs and all other costs of discovery) incurred by such substantially prevailing Party in such suit or action, including, without limitation, any post-trial or appellate proceeding, or in the collection or enforcement of any judgment or award entered or made in such suit or action.

6.2 Governing Law. All provisions of this Agreement and the rights and obligations of the Parties shall in all cases be governed by and construed in accordance with the laws of the State of Utah applicable to contracts executed in and to be wholly performed in Utah by persons domiciled in the State of Utah. Each Party hereto agrees that any suit, action or proceeding seeking to enforce any provision of, or based on any matter arising out of or in connection with, this Agreement or the transactions contemplated hereby or thereby, may only be brought before the federal courts located within Salt Lake County in the State of Utah, or state courts of the State of Utah located in Salt Lake County, and each Party hereby consents to the exclusive jurisdiction of such forums (and of the appellate courts therefrom) in any such suit, action or proceeding. Furthermore, each Party hereto waives, to the extent permitted by law, any objection which it may now or hereafter have to the laying of the venue of any such suit, action or proceeding in any such forum or that any such suit, action or proceeding which is brought in any such forum has been brought in any inconvenient forum. If for any reason, service of process cannot be found in the State of Utah, process in any such suit, action or proceeding may be served on a Party anywhere in the world, whether within or without the jurisdiction of any such forum.

6.3 Binding Effect. The provisions of this Agreement shall be binding upon and inure to the benefit of the Parties hereto and their respective heirs, executors, administrators, successors and assigns; provided, Requestor shall not assign this Agreement to any successor without the prior written consent of Rocky Mountain Power, which consent shall not be unreasonably withheld.

6.4 No Third-party Beneficiaries. Nothing contained in this Agreement shall be construed to create an agency relationship, association, joint venture, trust, or partnership, or impose a trust or partnership covenant, obligation, or liability on or with regard to either of the Parties. Each Party shall be individually responsible for its own covenants, obligations, and liabilities under this Agreement. Nothing in this Agreement shall be construed to create any duty to, any standard of care with reference to, or any liability or inference of liability to any third party.

6.5 Waiver. Failure of any Party at any time to require performance of any provision of this Agreement shall not limit such Party's right to enforce such provision, nor shall any waiver of any breach of any provision of this Agreement constitute a waiver of any succeeding breach of such provision or a waiver of such provision itself.

6.6 Amendment. This Agreement may not be modified or amended except by the written agreement of the Parties. No modification to this Agreement shall be deemed to be a waiver and binding unless in writing and signed by the party to be bound.

6.7 Severability. If any term or provision of this Agreement or the application thereof to any person or circumstance shall to any extent be held invalid or unenforceable, the remainder of this Agreement and the application of such term or provision to persons or circumstances other than those as to which it is held invalid or unenforceable shall not be affected thereby, and each term or provision of this Agreement shall be valid and enforceable to the fullest extent permitted by law.

6.8 Notices. All notices or communications of any kind that may be required or permitted to be given to any Party under the terms of this Agreement shall be in writing with all applicable postage and delivery charges prepaid and shall be given by: (i) hand delivery or messenger service maintaining records of delivery; (ii) Federal Express, UPS or a comparable overnight delivery service maintaining records of delivery; or (iii) certified or registered U.S. mail, return receipt requested; in each case, addressed to the applicable party as follows:

If to Requestor:

THE CITY OF BLUFFDALE
Mark Reid, City Manager
14350 South 2200 West
Bluffdale, Utah 84065

If to Rocky Mountain Power

ROCKY MOUNTAIN POWER
Attention: Jim Hermann
Customer & Regulatory Liaison
825 NE Multnomah, Suite 800
Portland, OR 97232

Notices or communications shall be deemed given upon the earlier of actual delivery or refusal of a Party to accept delivery thereof.

6.9 Recitals. Each Recital is incorporated into the body of this Agreement as if fully set forth herein.

6.10 Authority. Each individual executing this Agreement on behalf of a Party hereto warrants his or her authority to do so.

6.11 Execution. This Agreement shall not be effective until fully executed by each of the Parties hereto.

SECTION 7: INTEGRATION

This Agreement replaces and supersedes in the entirety all prior agreements among the Parties related to the same subject matter.

IN WITNESS WHEREOF, the Parties hereto have caused this Agreement to be executed by their duly authorized officers as of the dates set forth below.

THE CITY OF BLUFFDALE	**ROCKY MOUNTAIN POWER**
By:_____	**By:** _____
Name: _____	**Name:** _____

Title: _____ **Title: _____**

Date: _____ **Date: _____**

APPENDIX A

DESCRIPTION OF THE EXISTING FACILITIES

The existing facility to be relocated is approximately 0.45 mile section of the Camp Williams-Lone Peak/Dumas-Lone Peak 138 kilovolt double circuit transmission line. It consists of four steel structures with concrete pier foundations, one direct buried steel structure and OPGW that acts as the shield wire for the Camp Williams-Lone Peak/Dummas-Lone Peak line.

APPENDIX B

DESCRIPTION OF NEW FACILITIES

Relocate approximately 0.45 miles of the Camp Williams-Lone Peak/Dumas-Lone Peak 138 kilovolt double circuit transmission line in order to accommodate Bluffdale City's construction of the next segment of Porter Rockwell Boulevard. The relocated line will consist of two steel tangent direct embedded structures and three steel deadend structures on concrete pier foundations. This line has OPGW that acts as the shield wire, and with the relocation, the OPGW will need to be re-sagged and a splice point will have to be moved to the new steel structure with foundation.

CITY OF BLUFFDALE, UTAH
RESOLUTION NO. 2016-____

A RESOLUTION OF THE BLUFFDALE CITY COUNCIL AUTHORIZING THE CITY MANAGER TO ENTER INTO A CONSTRUCTION AGREEMENT FOR RELOCATION WORK BETWEEN ROCKY MOUNTAIN POWER AND THE CITY OF BLUFFDALE, FOR POWER LINES LOCATED AT OR NEAR PORTER ROCKWELL BOULEVARD.

WHEREAS the City of Bluffdale seeks Rocky Mountain Power to perform the work necessary to relocate a section of utilities located in the vicinity of the Porter Rockwell Boulevard to facilitate the construction of Segment 3 of Porter Rockwell Boulevard;

WHEREAS Rocky Mountain Power agrees to relocate the utilities to accommodate the construction of Porter Rockwell Boulevard as described in the attached agreement;

NOW, THEREFORE, BE IT RESOLVED BY THE CITY COUNCIL OF THE CITY OF BLUFFDALE AS FOLLOWS:

Section 1. **Authorization to Execute Agreement.** The City Council hereby authorizes the City Manager to enter into a Construction Agreement for Relocation Work between Rocky Mountain Power and the City of Bluffdale.

Section 2. **Effective Date.** This Resolution shall become effective immediately upon its passage and the City Council authorizes and directs the Mayor to execute and cause to be delivered the same.

PASSED, ADOPTED AND APPROVED: July 13, 2016.

_____
Mayor Derk P. Timothy

ATTEST: [seal]

_____
Wendy Deppe, City Recorder

Voting by the City Council:	Aye	Nay
Councilmember Jackson	_____	_____
Councilmember Nielsen	_____	_____
Councilmember Preece	_____	_____
Councilmember Westwood	_____	_____
Councilmember Wingate	_____	_____

Agenda Item 3.3

BLUFFDALE

EST. 1848

Memo

Date: July 12, 2016

From: Michael Fazio

To: Mark Reid, City Manager

Mayor Timothy

City Council

CC:

RE: Iron Horse Plat B Subdivision Preliminary Acceptance

City Engineering/Public Works has inspected the Iron Horse Plat B subdivision improvements and verified they meet the City specifications and requirements (see attached memo from Leonard Hight.)

I recommend preliminary acceptance of the inspected completed work and beginning the warranty period effective July 14, 2016.

A warranty bond is being retained for the entire warranty period.

BLUFFDALE

EST. 1848

Memo

Date: July 11, 2016

From: Leonard Hight

To: Michael Fazio

RE: Iron Horse begin warranty on phase B

Michael, I have verified all the punch list items dated July 11, 2016 have been completed. I have verified all testing has been completed. Testing included Water, Soil, Concrete, Asphalt.
I recommend we accept this subdivision and start the warranty.

Agenda Item 3.4

BLUFFDALE

14175 Redwood Road, Bluffdale, Utah 84065; Tel. 801-559-7781; mfazio@bluffale.com

Memo

Date: 6 July 2016

From: Michael Fazio, P.E.

To: Mark Reid, City Manager
Mayor Timothy
City Council

CC:

RE: Design Contract for Porter Rockwell Segment 5 – Awarded to Horrocks Engineering

---

The City Engineer and Construction Manager participated in the selection of the consultant to design the fifth segment of Porter Rockwell Boulevard. As part of an agreement with UDOT, Porter Rockwell Boulevard Segment 5 was anticipated for design and construction from 2019 to the present year. UDOT sent out a request for qualification for the design of the segment in May. Two firms participated in the request, Lochner Engineering and Horrocks Engineering. Under the review of the UDOT Consultant Services, the selection team selected Horrocks Engineering to complete the design of this segment. Horrocks Engineering submitted a cost proposal that was negotiated by Peter Tang, UDOT Project Manager and me.

This Local Government Engineering Services Contract is a three party contract between UDOT, the consultant (Horrocks Engineering) and the City of Bluffdale (local government) stipulates all the terms and conditions for supplying and receiving engineering design services.

This contract was reviewed by the City staff.

I recommend approving the contract for the design of Porter Rockwell Segment 5 and authorizing the City Manager to sign the contract.

LOCAL GOVERNMENT CONTRACT

STATE OF UTAH
LOCAL GOVERNMENT
ENGINEERING SERVICES
STREAMLINED REQUEST FOR QUALIFICATIONS
COST PLUS FIXED FEE

CONTRACT NO. _____

EFFECTIVE DATE _____

TRACKING NO. _____

Project No.: F-LC35(241)
PIN Description: Porter Rockwell Blvd (5th Segment)
FINET Prog No.: 5409115D
PIN No.: 11986
Work Discipline: Preconstruction Engineering

1. **CONTRACTING PARTIES:** This contract is between Bluffdale City, referred to as LOCAL AUTHORITY and

   Horrocks Engineers, Inc
   2162 West Grove Pkwy Ste 400
   Pleasant Grove, UT 84062

   Legal Status of Consultant: For Profit Corporation

   Fed ID No.: 87-0296502

   referred to as CONSULTANT, and approved by the Utah Department of Transportation, referred to as DEPARTMENT.

2. **REASON FOR CONTRACT:** The LOCAL AUTHORITY does not have sufficient qualified staff to complete the work required in the suggested time frame and the CONSULTANT is professionally qualified and willing to assist the LOCAL AUTHORITY with Preconstruction Engineering services as further described in Attachment C.

3. **PROJECT/CONTRACT PERIOD:** The project/contract will terminate January 21, 2018, unless otherwise extended or canceled in accordance with the terms and conditions of this contract.

4. **CONTRACT COSTS:** The CONSULTANT will be paid a maximum of $414,933.53 for costs authorized by this Contract as further described in Attachment D.

5. **ATTACHMENTS INCLUDED AS PART OF THIS CONTRACT:**
   Attachment A – Certification of Consultant and Local Authority
   Attachment B – Standard Terms and Conditions
   Attachment C – Services Provided by the Consultant
   Attachment D – Fees
   Attachment E – Insurance

The parties below hereto agree to abide by all the provisions of this contract. IN WITNESS WHEREOF, the parties sign and cause this contract to be executed.

CONSULTANT - Horrocks Engineers, Inc

By: _____ _____
Title: Date
Printed Name:

LOCAL AUTHORITY - Bluffdale City

By: _____ _____
Title: Date
Printed Name:

UTAH DEPARTMENT OF TRANSPORTATION

By: _____ _____
Title: Engineer for Preconstruction Date

DEPARTMENT Comptroller's Office

By: _____ _____
Title: Contract Administrator Date

CERTIFICATION OF CONSULTANT

By signing this contract on behalf of the CONSULTANT, I hereby certify I am a duly authorized representative of Horrocks Engineers, Inc and that neither I nor the above CONSULTANT I hereby represent has:

(a) employed or retained for commission, percentage, brokerage, contingent fee, or other consideration, any firm or person (other than a bona fide employee working solely for me or the above CONSULTANT) to solicit or secure this contract,

(b) agreed, as an express or implied condition for obtaining this contract, to employ or retain the services of any firm or person in connection with carrying out the contract, or

(c) paid, or agreed to pay to any firm, organization or person (other than a bona fide employee working solely for me or the above CONSULTANT) any fee, contribution, donation, or consideration of any kind for, or in connection with, procuring or carrying out the contract; except as hereby expressly stated (if any):

I acknowledge that this certificate is to be furnished to the Utah Department of Transportation and the Federal Highway Administration in connection with this contract involving participation of Federal-aid Highway Funds, and is subject to applicable State and Federal laws, both criminal and civil.

CERTIFICATION OF LOCAL AUTHORITY

By signing this contract on behalf of the LOCAL AUTHORITY, I hereby certify I am the duly authorized representative of Bluffdale City and that the above CONSULTANT or its representative has not been required, directly or indirectly as an express or implied condition in connection with obtaining or carrying out this contract, to:

(a) employ or retain, or agree to employ or retain, any firm or person, or

(b) pay, or agree to pay, to any firm, person, or organization, any fee, contribution, donation, or consideration of any kind; except as hereby expressly stated (if any):

I acknowledge that this certificate is subject to applicable State and Federal laws, both criminal and civil.

LOCAL GOVERNMENT
ENGINEERING SERVICES CONTRACT
STANDARD TERMS AND CONDITIONS

1. **AUTHORITY:** Provisions of this contract are pursuant to the authority set forth in Sections 27-12-21, 107 and 108; and 63-56 U.C.A. 1953, as amended, and the Utah State Procurement Regulations, which authorizes the LOCAL AUTHORITY and/or the DEPARTMENT to make purchases in accordance with said laws and regulations.

2. **CONTRACT JURISDICTION AND COMPLIANCE WITH LAWS:** The provisions of this contract shall be governed by the laws of the State of Utah. Also, the CONSULTANT and those engaged by the CONSULTANT shall comply with all Federal, State and local laws, regulations and other legally binding requirements that pertain to the services provided under this contract. Proof of the CONSULTANT'S compliance with licensing requirements shall be furnished to the LOCAL AUTHORITY and/or the DEPARTMENT upon request.

3. **RECORDS ADMINISTRATION:** The CONSULTANT shall maintain all books, papers, documents, accounting records and other evidence to support costs billed for under this contract. These records shall be retained by the CONSULTANT for a period of at least four (4) years after the contract terminates, or until all audits initiated within the four years have been completed, whichever is later. These records shall be made available at all reasonable times during the four year period for audit and inspection by the LOCAL AUTHORITY and/or the DEPARTMENT and other authorized State and Federal auditors. The CONSULTANT'S records supporting the cost proposal shall also be retained and made available for review by authorized Federal or State staff. Copies of requested records shall be furnished to the LOCAL AUTHORITY and/or the DEPARTMENT upon request.

4. **CONFLICT OF INTEREST:** The CONSULTANT certifies that none of its officers or employees are officers or employees of the State of Utah unless disclosure has been made in accordance with Section 67-16-8, U.C.A. 1953, as amended. The CONSULTANT certifies that no engineer, attorney, appraiser, inspector, surveyor or survey crew, or other person performing services for the CONSULTANT has, directly or indirectly, a financial or other personal interest, other than his employment or retention by the LOCAL AUTHORITY and/or the DEPARTMENT, in any contract or subcontract in connection with this project (Reference 23 CFR § 1.33). An example of this situation would be the CONSULTANT subcontracts with the Contractor to perform survey work while contracted by the LOCAL AUTHORITY and/or the DEPARTMENT to perform construction engineering management services for the same project.

   The CONSULTANT further warrants that it has no financial or other interest in the outcome of the work performed under the contract. Examples of this situation would be a Consultant who owns land, options to buy land, or some business enterprise that would be financially enhanced or diminished by any project alternatives.

5. **EMPLOYMENT OF DEPARTMENT EMPLOYEES:** The CONSULTANT agrees not to engage in any way the services on this contract of any present or former Utah Department of Transportation employee who was involved as a decision maker in the selection or approval processes or who negotiated and/or approved billings or contract modification for this contract.

6. **CONSULTANT, AN INDEPENDENT CONTRACTOR:** The CONSULTANT shall be an independent contractor, and as such, shall have no authority, express or implied to bind the LOCAL AUTHORITY and/or the DEPARTMENT to any agreement, settlement, liability, or understanding whatsoever; and agrees not to perform any acts as agent for the LOCAL AUTHORITY, except as specifically authorized and set forth herein. Persons employed by the LOCAL AUTHORITY and acting under the direction of the LOCAL AUTHORITY shall not be deemed to be employees or agents of the CONSULTANT. Compensation provided to the CONSULTANT herein shall be the total compensation payable hereunder by the LOCAL AUTHORITY.

7. **INDEMNITY - LIABILITY:** The CONSULTANT shall hold harmless and indemnify the DEPARTMENT and the LOCAL AUTHORITY, their officers, agents and employees from and against any and all claims, suits and cost, including attorneys fees, for injury or damage of any kind to the extent arising out of the negligent acts, wrongful acts, errors, or omissions of the CONSULTANT, or its subconsultants when acting within the scope of their subcontract, or their respective agents, employees or representatives.

The CONSULTANT is an independent contractor contracted with the LOCAL AUTHORITY and approved by the DEPARTMENT. Any periodic plan and specification review or construction inspection performed by the LOCAL AUTHORITY or DEPARTMENT arising out of the performance of the contract, does not relieve the CONSULTANT of its duty in the performance of the contract, or ensure compliance with customary standard of professional care.

8. **SEPARABILITY:** The declaration by any court, or other binding legal source, that any provision of this contract is illegal and void and shall not affect the legality and enforceability of any other provision of this contract, unless said provisions are mutually dependent.

9. **LIABILITY INSURANCE:** Services to be provided by the CONSULTANT under this contract are required to be covered by insurance. The CONSULTANT shall furnish the LOCAL AUTHORITY and the DEPARTMENT a Certificate of Insurance applying to this contract for each type of insurance required, to be approved by the DEPARTMENT and the LOCAL AUTHORITY, before the CONSULTANT begins work under this contract. The CONSULTANT'S insurer must be authorized to do business in Utah and must meet the specified A.M. Best rating or better at the time this contract is executed. The following insurance shall be maintained in force until all activities which are required by this contract or as changed by contract modification are completed and accepted by the LOCAL AUTHORITY and the DEPARTMENT:

(a) General Liability and Automobile Liability insurance with a limit of not less than $1,000,000 per occurrence and not less than $2,000,000 aggregate and having an A.M. Best rating of A-class VIII or better. The limit if different for this contract will be as designated in Attachment C to this contract. If this coverage is written on a claims-made basis, the Certificate of Insurance shall so indicate.

The CONSULTANT represents that as long as commercially available the insurance shall remain in effect such that claims reported up to three (3) years beyond the date of substantial completion of this contract are covered.

(b) Architect and/or Engineers Professional Liability (errors and omissions) insurance having an A.M. Best rating of A-class VIII or better, is required at the coverage amount of $1,000,000 per claim and $2,000,000 aggregate. If this coverage is written on a claims-made basis, the Certificate of Insurance shall so indicate. The CONSULTANT represents that as long as commercially available the insurance shall remain in effect such that claims reported up to three (3) years beyond the date of substantial completion of this contract are covered (on construction contracts or modifications for construction management the insurance, shall remain in effect for one (1) year after completion of the project).

(c) Valuable Papers & Records Coverage and/or Electronic Data Processing (Data and Media) Coverage for the physical loss or destruction of the work product including drawings, plans, specifications and electronic data and media. Such insurance shall be of a sufficient limit to protect the CONSULTANT, its sub-consultants, the LOCAL AUTHORITY, and the DEPARTMENT from the loss of said information.

(d) Aircraft Liability in the amount of $1,000,000 per occurrence if aircraft are utilized in connection with this contract.

(e) The CONSULTANT shall provide evidence that his employees and sub-consultant employees are covered by Workers Compensation. If they are covered by Workers Compensation Fund of Utah, then the A.M. Best rating is not required in this area.

(f) The CONSULTANT shall require the insurance company that issues the Certificates of Insurance for the evidence of the required insurance coverage to endeavor to provide the DEPARTMENT and the LOCAL AUTHORITY with 30 days written notice in the event that coverage is canceled before the policy expiration date stated in the Certificate. The CONSULTANT further agrees to provide the DEPARTMENT and the LOCAL AUTHORITY with 30 days written notice prior to making an alternation or material change to the required insurance coverage.

Policies referred to in 9(a) and 9(d) above are required to be endorsed naming the LOCAL AUTHORITY, UDOT, and the State of Utah as Additional Insureds and, on General Liability and Aircraft Liability,

indicate they are primary and not contributing coverage. All required policies, endorsements, insurance companies issuing same, and self insured programs are subject to review and approval by the State of Utah, Risk Manager.

10. **HEALTH INSURANCE:** The CONSULTANT agrees that if the CONSULTANT has an initial contract of 1.5 million dollars or more, or the contract and modifications are anticipated in good faith to exceed 1.5 million dollars, or the CONSULTANT has a subcontract at any tier that involves a sub-consultant that has an initial subcontract of $750,000 or more, and/or the CONSULTANT has a subcontract at any tier that is anticipated in good faith to exceed $750,000; hereby certifies the following.

The CONSULTANT and all applicable sub-consultants have and will maintain an offer of qualified health insurance coverage for their employees, as defined in UCA Section 34A-2-104 for the employees who live and/or work within the State of Utah, along with their dependents, during the duration of the contract. Employee, for purposes of these requirements, shall be no broader than the use of the term employee for purposes of State of Utah Workers' Compensation requirements.

The Executive Director or designee shall have the right to request a recertification by the CONSULTANT by submitting a written request to the CONSULTANT, and the CONSULTANT shall so comply with the written request within ten (10) working days of receipt of the written request; however, in no case may the CONSULTANT be required to demonstrate such compliance more than twice in any 12-month period. The CONSULTANT and all applicable sub-consultants will be subject to all applicable penalties. The CONSULTANT will provide these same requirements in all applicable subcontracts at every tier.

11. **PROGRESS:** The CONSULTANT shall begin the work required by this contract within one week following official notification by the DEPARTMENT to proceed. The CONSULTANT shall prosecute the work diligently and to the satisfaction of the LOCAL AUTHORITY and the DEPARTMENT. If Federal Funds are used on this contract the work will be subject to periodic review by the Federal Highway Administration.

The CONSULTANT will prepare monthly progress reports following the format established by the LOCAL AUTHORITY and the DEPARTMENT in sufficient detail to document the progress of the work and support the monthly claim for payment. Payments will not be made without a supporting progress report. In addition, the CONSULTANT will update the DEPARTMENT'S “electronic Program Management” (ePM) system bi-weekly to reflect the status of the project.

Progress conferences will be held periodically. The CONSULTANT will prepare and present written information and studies to the LOCAL AUTHORITY and the DEPARTMENT so it may evaluate the features and progress of the work. Any one of the three parties may request a conference; to be held at the office of any, or at a place designated by the LOCAL AUTHORITY or the DEPARTMENT. The conferences shall also include inspection of the CONSULTANT'S services and work products when requested by the LOCAL AUTHORITY or the DEPARTMENT.

The CONSULTANT will be required to perform such additional work as may be necessary to correct errors caused by the CONSULTANT in the work required under the contract without undue delays and without additional cost to the LOCAL AUTHORITY and the DEPARTMENT.

At any time the CONSULTANT determines the contract work cannot be completed within the specified time or budget, the LOCAL AUTHORITY and the DEPARTMENT shall be immediately notified in writing. The LOCAL AUTHORITY and the DEPARTMENT may, at their sole discretion, extend the contract by written modification.

The LOCAL AUTHORITY or the DEPARTMENT may terminate this contract in accordance with termination provisions of this contract including failure of the CONSULTANT to make satisfactory progress of the contract work.

Should the LOCAL AUTHORITY or the DEPARTMENT desire to suspend the work, but not terminate the contract, this will be done by verbal notification followed by written confirmation from the LOCAL AUTHORITY or the DEPARTMENT. The work may be reinstated upon 30 days advance written notice from the LOCAL AUTHORITY or the DEPARTMENT.

Unless extended or terminated in writing, this contract will terminate on the expiration date, or at the end of the specified calendar days.

12. **REVIEW AND INSPECTION OF WORK:** It is expressly understood and agreed that authorized representatives of the LOCAL AUTHORITY, DEPARTMENT and, when Federal Funds are used, the Federal Highway Administration shall have the right to review and inspect the work in process, and the CONSULTANT'S facilities, at any time during normal business hours or by appointment.

13. **NON DISCRIMINATION PROVISIONS:** The CONSULTANT agrees to abide by the provisions of the Utah Anti-discrimination Act, Title 34 Chapter 35 U.C.A. 1953, as amended, and Title VI and Title VII of the Civil Rights Act of 1964 (42 USC 2000e), which prohibits discrimination against any employee or applicant for employment, or any applicant or recipient of services, on the basis of race, religion, color, or national origin; and further agrees to abide by Executive Order No. 11246 entitled "Equal Employment Opportunity," as amended by Executive order 11375 and as supplemented in Department of Labor Regulations (41CFR Part 60), which prohibits discrimination on the basis of age; and Section 504 of the Rehabilitation Act of 1973, which prohibits discrimination on the basis of handicap. The CONSULTANT agrees to abide by Utah's Executive Order, dated June 30, 1989, which prohibits sexual harassment in the work place. Sections 49 CFR 21 through Appendix H and 23 CFR 710.405(b) are applicable by reference in all contracts and subcontracts financed in whole or in part with Federal-aid highway funds. The CONSULTANT further agrees to furnish reports to the LOCAL AUTHORITY and/or the DEPARTMENT upon request for the purpose of determining compliance with these statutes identified in this section. The CONSULTANT shall comply with the Americans With Disabilities Act (ADA).

The CONSULTANT shall not discriminate on the basis of race, color, national origin, or sex in the performance of this contract. The CONSULTANT shall carry out applicable requirements of 49 CFR Part 26 in the award and administration of federal-aid contracts. Failure by the CONSULTANT to carry out these requirements is a material breach of this contract, which may result in the termination of this contract or such other remedy as the DEPARTMENT deems appropriate. During the performance of this contract, the CONSULTANT, for itself, its assignees and successors in interest agrees as follows:

(a) **Compliance with Regulations:** The CONSULTANT shall comply with the Regulation relative to nondiscrimination in federally-assisted programs of the 49 CFR Part 21, and the 23 CFR Part 200 as they may be amended from time to time, (hereinafter referred to as the Regulations), which are herein incorporated by reference and made a part of this contract.

(b) **Nondiscrimination:** The CONSULTANT, with regard to the work performed by it during the contract, shall not discriminate on the grounds of race, color, national origin, sex, age, disability/handicap, and low income status in the selection and retention of subconsultants, including procurements of materials and leases of equipment. The CONSULTANT shall not participate either directly or indirectly in the discrimination prohibited by 49 CFR § 21.5 of the Regulations, including employment practices when the contract covers a program set forth in Appendix B of the Regulations.

(c) **Solicitations for Subconsultants, Including Procurements of Materials and Equipment:** In all solicitations either by competitive bidding or negotiation made by the CONSULTANT for work to be performed under a subcontract, including procurements of materials or leases of equipment, each potential subconsultant or supplier shall be notified by the CONSULTANT of the CONSULTANT's obligations under this contract and the Regulations relative to nondiscrimination on the grounds of race, color, national origin, sex, age, disability/handicap, and low income status.

(d) **Information and Reports:** The CONSULTANT shall provide all information and reports required by the Regulations or directives issued pursuant thereto, and shall permit access to its books, records, accounts, other sources of information, and its facilities as may be determined by the DEPARTMENT to be pertinent to ascertain compliance with such Regulations, orders and instructions. Where any information required of a CONSULTANT is in the exclusive possession of another who fails or refuses to furnish this information the CONSULTANT shall so certify to the DEPARTMENT, and shall set forth what efforts it has made to obtain the information.

(e) **Sanctions for Noncompliance:** In the event of the CONSULTANT's noncompliance with the nondiscrimination provisions of this contract, the DEPARTMENT shall impose such contract sanctions as it may determine to be appropriate, including, but not limited to:

(1) withholding of payments to the CONSULTANT under the contract until the CONSULTANT complies, and/or

(2) cancellation, termination or suspension of the contract, in whole or in part.

(f) **Incorporation of Provisions:** The CONSULTANT shall include the provisions of paragraphs (a) through (f) in every subcontract, including procurements of materials and leases of equipment, unless exempt by the Regulations, or directives issued pursuant thereto.

The CONSULTANT shall take such action with respect to any subcontract. or procurement as the DEPARTMENT may direct as a means of enforcing such provisions including sanctions for non-compliance: Provided, however, in the event a CONSULTANT becomes involved in, or is threatened with, litigation with a subconsultant or supplier as a result of such direction, the CONSULTANT may request the DEPARTMENT to enter into such litigation to protect the interests of the DEPARTMENT, and, in addition, the CONSULTANT may request the United States to enter into such litigation to protect the interests of the United States. *(Provision revised July 29, 2013.)*

14. **CERTIFICATION REGARDING DEBARMENT, SUSPENSION AND OTHER RESPONSIBILITY MATTERS:** The CONSULTANT agrees to abide by the requirements of 49 CFR Part 29. By signing this contract the CONSULTANT certifies that to the best of their knowledge and belief that it or its principals:

(a) Are not presently debarred, suspended, proposed for debarment, declared ineligible, or voluntarily excluded from covered transactions by any Federal department or agency;

(b) Have not within a three-year period preceding this proposal been convicted of or had civil judgment against them for commission of fraud or a criminal offense in connection with obtaining, attempting to obtain, or performing a public (Federal, State or Local) transaction or contract under a public transaction; violation of Federal or State antitrust statutes or commission of embezzlement, theft, forgery, bribery, falsification or destruction of records, making false statements, or receiving stolen property;

(c) Are not presently indicted for or otherwise criminally or civilly charged by a governmental entity (Federal, State, or Local) with commission of any of the offenses enumerated in subparagraph 14(b) of this certification; and

(d) Have not within a three-year period preceding this contract had one or more public transactions (Federal, State, or Local) terminated for cause or default.

Where the CONSULTANT is unable to certify to any of the statements in this certification, the CONSULTANT shall attach an explanation to this contract. Exceptions will not necessarily result in denial of award, but will be considered in determining CONSULTANT'S responsibility. Any exceptions noted shall identify to whom it applies, the initiating agency, and dates of the action. Providing false information may result in criminal prosecution or administrative sanctions.

15. **CERTIFICATION OF COMPLIANCE ON LOBBYING RESTRICTIONS:** The CONSULTANT agrees to conform with the lobbying restrictions established by Section 319 of Public Law 101-121 (Department of the Interior and Related Agencies Appropriations Act for Fiscal Year 1990) for contracts exceeding $100,000 in Federal Funds. The CONSULTANT certifies, by signing this contract, to the best of their knowledge and belief, that:

(a) No Federal appropriated funds have been paid or will be paid, by or on behalf of the undersigned, to any person for influencing or attempting to influence an officer or employee of any Federal agency, a Member of Congress, an officer or employee of Congress, or an employee of a Member of Congress in connection with the awarding of any Federal contract, the making of any Federal grant, the making of any Federal loan, the entering into of any cooperative agreement, and the extension, continuation, renewal, amendment, or modification of any Federal contract, grant, loan, or cooperative agreement.

(b) If any funds other than Federal appropriated funds have been paid or will be paid to any person for influencing or attempting to influence an officer or employee of any Federal agency, a Member of Congress, an officer or employee of Congress, or an employee of a Member of Congress in connection with this Federal contract, grant, loan, or cooperative agreement, the undersigned shall complete and submit Standard Form-LLL, "Disclosure Form to Report Lobbying," in accordance with its instructions.

This certification is a material representation of fact upon which reliance was placed when this transaction was made or entered into. Submission of this certification is a prerequisite for making or entering into this transaction imposed by Section 1352, Title 31, U.S. Code. Any person who fails to file the required certification shall be subject to a civil penalty of not less than $10,000 and not more than $100,000 for each such failure.

The CONSULTANT also agrees by signing this contract that they shall require that the language of this certification be included in all lower tier subcontracts, which exceed $100,000 and that all such sub-recipients shall certify and disclose accordingly.

16. **CERTIFICATION OF COMPLIANCE ON DRUG AND ALCOHOL TESTING:** The CONSULTANT hereby certifies by executing this Contract, that the CONSULTANT shall comply with all applicable provisions of Rule 916-6 Drug and Alcohol Testing in State Construction Contracts and UCA Section 63G-6-604 throughout the term of this Contract. The CONSULTANT shall provide this requirement in its contracts with subconsultants.

17. **CONSULTANT COST CERTIFICATION:** The CONSULTANT hereby certifies by executing this Contract, that the CONSULTANT has previously submitted a CONSULTANT certification of final indirect costs in accordance with the Federal Acquisition Regulations (FAR) cost principles as described in the FHWA Order 4470.1A and in the DEPARTMENT Financial Screening Application.

18. **OWNERSHIP OF DOCUMENTS:** All tracings, plans, manuscripts, specifications, data, maps, etc., prepared or obtained by the CONSULTANT, as a result of working on this contract, shall be delivered to and become the property of the LOCAL AUTHORITY. All documents and data pertaining to work required by this contract shall be the property of the LOCAL AUTHORITY and shall be delivered to the LOCAL AUTHORITY within 10 working days after termination of the contract, regardless of the reason for termination; and without restriction or limitation on their further use. Costs of all the above items shall be considered as included in the basic contract compensation for the work as described in ATTACHMENT C.

The CONSULTANT shall not be responsible for another party's application of information contained in the contract documents to other projects, or for uses other than that for which the information was intended. Should patentable discoveries or inventions result from work required by this contract, all rights to them shall be the sole property of the CONSULTANT. Except, the CONSULTANT agrees to grant to the United States Government and the State of Utah a non exclusive, non transferable, paid up, license to use the discovery or invention. The CONSULTANT is permitted to copyright reports and other contract products provided that the LOCAL AUTHORITY, the DEPARTMENT and the Federal Highway Administration have a royalty free, non exclusive, irrevocable right to reproduce, publish, or otherwise use and authorize others to use for governmental purposes.

19. **ASSIGNMENT AND SUBCONTRACTING:** The CONSULTANT shall not subcontract any of the work required by this contract, or assign monies to be paid to the CONSULTANT hereunder, without the prior written approval of the LOCAL AUTHORITY and/or the DEPARTMENT. The amount billed to the DEPARTMENT for subcontractor costs shall be the same amount the CONSULTANT actually pays subcontractor for services required by this contract. All payments made by the CONSULTANT to the subcontractor for services required by this contract shall be subject to audit by the LOCAL AUTHORITY and/or the DEPARTMENT. All subcontracts must include all the same terms and conditions and provisions included in this contract. However, the prime CONSULTANT is responsible for ensuring that all work performed by sub-consultants is insured under their insurance policy, or they require that the sub-consultants meet the insurance provisions required under this contract.

The CONSULTANT must perform work valued at not less than 50% of the total contract amount, excluding specialized services, with its own staff. Specialized services are those services or items that are not usually furnished by a consultant performing the particular type of service contained in this contract.

20. **PERSONNEL/STAFFING PLAN:** Any change in personnel from that specifically identified in Attachment C of this contract, must be approved by the DEPARTMENT through a modification to this contract or a Contract Management System (CMS) Alternative Staff Transaction prior to any work being performed by new personnel. Invoices submitted for payment with unauthorized personnel will not be paid. *(Provision revised July 29, 2013.)*

21. **DISPUTES:** Claims for services, materials, or damages not clearly authorized by the contract, or not ordered by the LOCAL AUTHORITY and the DEPARTMENT by prior written authorization, will not be paid. The CONSULTANT shall notify the LOCAL AUTHORITY and the DEPARTMENT in writing, and wait for written approval, before it begins work not previously authorized. If such notification and approval is not given or the claim is not properly documented, the CONSULTANT shall not be paid the extra compensation. Proper documentation alone shall not prove the validity of the claim. The parties agree to use arbitration or mediation after exhausting applicable administrative reviews to resolve disputes arising out of this contract where the sole relief sought is monetary damages $100,000 or less, exclusive of interest and costs.

22. **CLAIMS - DELAYS AND EXTENSIONS:** The CONSULTANT agrees to proceed with the work previously authorized by the contract, or in writing, continually and diligently, and will make no charges or claims for extra compensation for delays or hindrances within its control during the progress of this contract. The LOCAL AUTHORITY and the DEPARTMENT may allow an extension of time for the contract, for a reasonable period as agreed by the parties, should a delay or hindrance occur. The LOCAL AUTHORITY and/or the DEPARTMENT shall not waive any of its rights under the contract by permitting the CONSULTANT to proceed with the contract after the established completion date.

23. **CONSULTANT'S ENDORSEMENT ON PLANS, ETC.:** The CONSULTANT (if a firm, the responsible principal) is required to endorse and affix its seal to plans, reports, and engineering data furnished to the LOCAL AUTHORITY and/or the DEPARTMENT under this contract.

24. **CONTRACT MODIFICATIONS:** This contract may be amended, modified, or supplemented, as it is mutually agreed to by the parties by written contract modification, executed by the parties hereto and attached to the original signed contract. If there is Federal funding as part of the revenue for this contract, the Federal Highway Administration must approve all changes.

Claims for services furnished by CONSULTANT, not specifically authorized by this contract or by appropriate modification, shall not be paid by the LOCAL AUTHORITY or the DEPARTMENT. When a contract modification has been agreed to by the parties no claim for the extra work done or material furnished shall be made by the CONSULTANT until the written modification has been fully executed. Any verbal agreements not confirmed in writing are non-binding.

25. **TERMINATION:** This contract may be terminated as follows:

(a) Mutual agreement of the parties; in writing and signed by the parties.

(b) By either party for failure of the other party to fulfill its obligations, as set forth with the provisions of this contract and in particular with Attachment C, "Services Provided by the CONSULTANT" or Section 40, "Duties of the DEPARTMENT". Reasonable allowances will be made for circumstances beyond the control of the CONSULTANT and the LOCAL AUTHORITY or the DEPARTMENT. Written notice of intent to terminate is required and shall specify the reasons supporting termination.

(c) By the LOCAL AUTHORITY or the DEPARTMENT for the convenience of the State or the LOCAL AUTHORITY upon written notice to the CONSULTANT.

(d) Upon satisfactory completion of required contract services.

On termination of this contract all accounts and payments will be processed in accordance with contract terms. An appraisal of the value of work performed to the date of termination shall be made to establish the amount due to or from the CONSULTANT. If the contract fee type is Cost-Plus-Fixed-Fee-With-Fixed-Total-Additive-Rate and the contract is terminated for reasons other than (d), the final fixed fee amount will be paid in proportion to the percentage of work completed as reflected by the periodic invoices as of the date of termination of the contract. Upon determining the final amount due the CONSULTANT, or to be reimbursed by the CONSULTANT, in the manner stated above, the final payment will be processed in order to close out the contract.

26. **DESIGN/CONSTRUCTION:** The CONSULTANT will utilize all current DEPARTMENT standards and be responsible for the professional quality, technical accuracy, and the coordination of all designs, drawings, specifications, and other services furnished by the CONSULTANT under this contract. The CONSULTANT will, without additional compensation, correct or revise any errors or omissions in its

design, drawings, specifications and other services. This contract may remain open for modifications for any unforeseen work that may be deemed necessary by the DEPARTMENT going into the construction phase to accommodate future work by the prime CONSULTANT or sub-consultant. CONSULTANT will perform the services in accordance with the customary standard of professional care.

27. **ELECTRONIC PLAN ROOM DOCUMENTATION:** All consultants will be expected to adhere to the current DEPARTMENT development standards on the web site. It is the CONSULTANTS responsibility to provide all plans, specifications, surveys, and associated data in the DEPARTMENT acceptable electronic formats on one or more CD's. All project data will be organized in the DEPARTMENT'S project directory structure as specified in the DEPARTMENT'S current CADD Standards. It is the CONSULTANT'S responsibility to be aware of all DEPARTMENT requirements and formats. The DEPARTMENT CADD standards are available at the Engineering Technology Services (ETS) sub-page of the DEPARTMENT website www.udot.utah.gov/ets.

Computer Aided Drafting and Design acceptable formats are as follows:

(a) Drafting: MicroStation Design format (.dgn) by Bentley Systems Inc., version 8.5 or higher.

(b) Civil Design: InRoads by Bentley Systems Inc. version 8.8 or higher acceptable formats are as follows: Geometry files (.alg), Surface or digital terrain models (.dtm), Template libraries (.itl), and Roadway Designer files (.ird).

(c) Survey and Photogrammetry: InRoads Survey format (.fwd) by Bentley Systems Inc. version 8.8 or higher. Raw survey files will be in ASCII format, (point number, Northing, Easting, Elevation and code). Survey points will be coded using the DEPARTMENT feature codes located in the DEPARTMENT preference file (.xin) and Raster Images (aerial photos) will be in MicroStation compatible formats. Design and Survey work will adhere to the DEPARTMENT CADD Standards and "Mapping & Aerial Photogrammetry" Guide.

(d) Plotting: In order for the project to be published into the DEPARTMENT Electronic Plan Room (EPR) system, the CONSULTANT will prepare a file to direct the DEPARTMENT's plotting software, InterPlot, by Bentley Systems Inc. to produce the correct output. This is the InterPlot Organizer's plot-set file (filename.ips). This file contains specifications for each sheet in the plan set and controls the order and name of each sheet as they will appear in the EPR system. Instructions for preparing this file can be found at the DEPARTMENT Engineering Technology Services (ETS) website as stated above.

(e) Responsibility: Region Designers/Consultants, Action - When submitting electronic files for advertising, Region or consultant designers must deliver to the DEPARTMENT the design files on CD's in the established project directory structure. The following files must be included in the submittal: 1) Major design files, including roadway design, structure, striping, signing, signals, and profiles (Microstation format), 2) Existing topography and existing utilities (Microstation format), 3) Existing and proposed surfaces (dtm format), 4) InRoads alignments (alg), templates (itl), roadway designer files (ird) and preference files (xin), 5) Configuration and resource files including font and linestyle resource files.

(f) Placement: Action – Project data must be delivered to the DEPARTMENT on CD's in the established project directory structure.

The CONSULTANT will be responsible for the accuracy of the translated data.

Technical and Standards support will be provided to the CONSULTANT through the Engineering Technology Services Group of the Project Development Division at UDOT.

28. **REQUIREMENTS FOR COMPUTER ELEMENTS:** Hardware, firmware and/or software elements that the CONSULTANT procures, furnishes, licenses, sells, integrates, creates and/or enhances for the LOCAL AUTHORITY and the DEPARTMENT under this contract shall achieve the specific objectives specified in the work plan. These elements shall be free of defects, or "bugs," that would prevent them from achieving the objectives specified in the work plan.

Computer software and applications created and/or enhanced under this contract shall include as deliverables; user instructions, program documentation, program listings, source code and executables in

specified compiled formatted files. The program documentation shall include flow charts and detailed treatment of decision algorithms and their technical basis. Appropriate LOCAL AUTHORITY individuals will review "user instructions" and "program documentation" for acceptability. Formal sign-offs will record such events and be part of the project repository. Software development and operating system platforms shall be approved by the LOCAL AUTHORITY and the DEPARTMENT and specified in the work plan. Changes to these platforms shall only be allowed by written authorization by the LOCAL AUTHORITY and the DEPARTMENT.

29. **COST PRINCIPLES:** Regardless of the funding source, the costs allowable for reimbursement will be governed by the Federal Acquisition Regulations, Title 48, Part 31, as modified by Utah State law, administrative rules, and regulations on contract provisions.

30. **RIGHT OF WAY SUBMITTAL REQUIREMENTS:** Submission of right of way acquisition packages are required to follow the *UDOT Right of Way ProjectWise Naming Convention and Attributing Guide*, as amended, which is incorporated herein by this reference. The Guide may be found on the UDOT website www.udot.utah.gov/go/rowprojectwiseguide. *(Provision revised September 30, 2013.)*

31. **GOVERNMENT RECORDS AND ACCESS MANAGEMENT ACT:** Pursuant to the Government Records Access and Management Act, Title 63G, Chapter 2, Utah Code Annotated, the CONSULTANT understands that if it believes that any records it submits to the DEPARTMENT and/or LOCAL AUTHORITY should be considered confidential for business purposes under Utah Code Ann. §63G-2-309, it must attach written notice of that opinion to the record when it first submits it. The CONSULTANT understands that the DEPARTMENT and/or LOCAL AUTHORITY will not treat any such record as confidential under Section 63G-2-309 absent such written notification. Additionally, the CONSULTANT agrees that neither the State of Utah, the DEPARTMENT and/or LOCAL AUTHORITY, nor any of their agents or employees are responsible for disclosure of any record that the CONSULTANT considers confidential if either the State Records Committee or a court orders it released.

32. **WORK ACCEPTANCE:**

(a) All work performed under this contract shall be performed in accordance with Standards, Specifications, Manuals of Instruction, Policies and Procedures established by the DEPARTMENT. All work shall be subject to the approval of the LOCAL AUTHORITY and the DEPARTMENT through its designated representatives. When the work is Federally funded, the LOCAL AUTHORITY and the DEPARTMENT will coordinate with the Federal Highway Administration (FHWA) to obtain concurrence in the work.

(b) Reviews and Quality Assurance: All contracts require a quality control / quality assurance plan and checklist. For design projects specifically, the CONSULTANT shall provide a project specific QC/QA plan that meets or exceeds the DEPARTMENT'S standard QC/QA plan located on the DEPARTMENT web page at www.udot.utah.gov/go/qcqa which is hereby incorporated by reference into this contract. If the CONSULTANT elects to use its own QC/QA plan, that plan shall, as a minimum, contain the requirements of the DEPARTMENT'S plan and be approved by the DEPARTMENT'S Project Manager. The CONSULTANT will meet all document retention requirements and schedules. *(Provision revised February 12, 2014.)*

33. **GENERAL CONTROL AND INSPECTIONS:** The CONSULTANT shall be represented at progress review meetings as may be scheduled by the LOCAL AUTHORITY and the DEPARTMENT. The CONSULTANT shall accompany LOCAL AUTHORITY and the DEPARTMENT personnel and other representatives on field inspections and at conferences as may be required.

34. **IF THIS CONTRACT IS FOR DESIGN:**

(a) The design consultant will be retained to answer and clarify any questions on the design during construction. The consultants will be required to include this task in their cost proposal. The Construction Project Engineer will call on the CONSULTANT as he needs him. If the work required from the CONSULTANT is due to errors in the design, the CONSULTANT will not be reimbursed. To enhance the communication between the LOCAL AUTHORITY, the DEPARTMENT and Consultants, the LOCAL AUTHORITY and the DEPARTMENT are requiring that the CONSULTANT attend the following meetings: kickoff meeting, preconstruction meeting, and the final inspection meeting. These meetings should be included in the detail work plan.

(b) If the project requires horizontal and vertical control to be established and/or identifying existing surface features to develop a Digital Terrain Model (DTM) for the design of the project, the CONSULTANT will follow the narrative in the *Project Delivery Network* for Task 1B1 Develop Base Mapping/Existing Surface on the UDOT website www.udot.utah.gov/go/pdnpdn, which is incorporated herein by this reference. *(Provision revised September 30, 2013.)*

35. IF THIS CONTRACT IS FOR CONSTRUCTION ENGINEERING MANAGEMENT:

(a) Construction Administration
Administration of any construction project delegated to the CONSULTANT. The CONSULTANT will perform activities for Construction Administration as identified and defined in the *UDOT Construction Manual of Instruction*. Deliverables and checklists for the project are based on project specifications. The CONSULTANT is required to comply with DEPARTMENT partnering requirements and oversee contractor participation. This includes but is not limited to attending DEPARTMENT training, leading the partnering effort on the project along with the contractor, participating in weekly updates on the partnering website, and monitoring and measuring partnering on the project. The CONSULTANT is responsible for required documentation for any item addressed in the project specifications and Construction contract. Items will include, but not be limited to, Materials Testing, Materials Certifications, Change Orders, Project and Materials Inspection, Civil Rights requirements, Engineer's Diary, Subcontracts, Payrolls, Meeting Minutes, Project Scheduling and Process Review summaries.

(b) Materials Testing and Inspection
The CONSULTANT will perform materials testing and inspection in accordance with the requirements of the project Construction contract. These requirements include the Materials Acceptance and Independent Assurance Programs, as outlined in the *UDOT Materials Manual of Instruction (MOI)*. The Materials Acceptance Program defines requirements for acceptance testing and verification testing. The Independent Assurance Program defines requirements for independent assurance testing, personnel qualifications and laboratory qualifications.

(c) Acceptance Testing/Inspection
Acceptance testing/inspection will be performed in accordance with the project specifications and *UDOT Minimum Sampling and Testing Requirements (MS&T)*. Minimum frequencies for materials acceptance testing and inspection are defined in the UDOT MS&T and are the absolute minimum for the identified materials, regardless of special provision requirements.

(d) Independent Assurance Testing
Requirements for Independent Assurance testing are outlined in the UDOT Materials MOI and project level requirements will be performed and documented by the CONSULTANT at the project level. Documentation will be provided for IA test results, personnel qualifications and laboratory qualifications. Documentation for personnel and laboratory qualification will be performed prior to any sampling or testing being performed on the project.

(e) Project Inspection
Project Inspection is a combination of the presence of the CONSULTANT, and the documentation of the project's daily activities. The CONSULTANT will perform inspection in accordance with project specifications and documentation will include, at a minimum, Inspector's Daily Reports, materials placement inspection reports, project diaries, measurement and payment information, and project visual reviews for items such as traffic control placement and conformance, etc.

(f) Project Closeout
Project information obtained through contract administration, materials testing and project inspection will be collated and reviewed by the CONSULTANT to assure that all of the necessary documents are present to demonstrate compliance with the plans, specifications and Construction contract. Closeout will be performed in accordance with the comprehensive checklist in the UDOT Construction MOI and will include at a minimum, all C-106 forms, the project C-196 form, all change orders and all administrative requirements, such as payrolls and Civil Rights requirements.

(g) The DEPARTMENT's Construction Manual of Instruction and Materials Manual of Instruction can be obtained from Central Construction and Materials Division 801-965-4346 or available at the sub-page of the DEPARTMENT website www.udot.utah.gov/ets.

36. INSPECTION OF INTELLIGENT TRANSPORTATION SYSTEMS (ITS) AND ELECTRICAL CONSTRUCTION: In order to ensure complete impartiality in the performance of construction inspection, any consultant engineering companies who are concurrently performing or bidding on ITS or electrical construction work for the LOCAL AUTHORITY and/or DEPARTMENT will not be considered eligible to perform construction inspection of ITS or electrical work on any projects as part of a consultant contract.

Consultants who are selected to do ITS or electrical construction inspection as part of a consultant contract will be requested to affirm that they currently are not performing or bidding on any electrical or ITS construction work for LOCAL AUTHORITY and/or DEPARTMENT and will not for the duration of the relevant consulting contract.

For the purposes of this provision, ITS or electrical construction is defined as follows:

Work involving the installation or repair of underground electrical conduit, electrical cables, fiber-optic cable, or any other construction work involving 120 volt (or greater) current for which an electrician's license is required. Field work taking place inside an electrical cabinet, or involving low voltage detection or data circuits, will *not* be considered ITS or electrical construction. Diagnosis, testing, calibration, aiming, resplicing, or repair of low voltage detection circuits, fiber-optic cable, or detection equipment will *not* be considered ITS or electrical construction.

Consultant engineering companies who also perform ITS or electrical construction work under contract to LOCAL AUTHORITY and/or DEPARTMENT *will* be eligible to perform the following types of consulting work, provided that the work is on completely different projects, with no possibility for conflict of interest: design work, ITS system integration, software development.

37. NO THIRD PARTY BENEFICIARIES: The parties enter in to this contract for the sole benefit of the parties, in exclusion of any third party, and no third party beneficiary is intended or created by the execution of this contract.

38. COORDINATION WITH DEPARTMENT FUNCTIONAL MANAGERS: In order to ensure programmatic consistency, if the project requires, the CONSULTANT will coordinate decisions with the Region and/or Central Functional Managers in addition to the DEPARTMENT Project Manager. It is important for consultants to seek input into decisions from the technical experts within the DEPARTMENT.

39. USE OF STATE SEAL AND UDOT LOGO: The CONSULTANT will not misrepresent their employees as State of Utah employees. The CONSULTANT will not use the Utah State Seal or UDOT logo on business cards for their employees nor use Utah or UDOT letterhead on correspondence signed by their employees with the following exception: the CONSULTANT may incorporate the UDOT logo on their business cards stating, "In partnership with UDOT" in addition to the CONSULTANT'S own logo. The CONSULTANT may prepare correspondence for the approval and signature of appropriate State of Utah employees.

40. DUTIES OF THE LOCAL AUTHORITY AND THE DEPARTMENT:

(a) Guarantee Access: The LOCAL AUTHORITY and/or the DEPARTMENT shall guarantee access to and make all provisions for the CONSULTANT to enter upon all lands, both public and private which in the judgment of the parties hereto are necessary to carry out such work as may be required.

(b) Prompt Consideration: The LOCAL AUTHORITY and the DEPARTMENT shall give prompt consideration to all reports, plans, proposals and other documents presented by the CONSULTANT.

(c) Documents: The DEPARTMENT shall furnish Standards, Specifications, Manuals of Instruction, Policies and Procedures, and other available information, including any material previously prepared for this work. Specific materials related to this contract that will be furnished by the LOCAL AUTHORITY and the DEPARTMENT.

(d) Services: The LOCAL AUTHORITY and the DEPARTMENT will perform standard services relating to this contract.

SERVICES PROVIDED BY THE CONSULTANT

1. SCOPE SUMMARY:

Provide Pre-Construction Engineering for the Porter Rockwell Blvd project in Bluffdale City. Design elements included a new alignment of roadway, with culverts and or Bridge, west of Redwood road going west from the intersection of Porter Rockwell Blvd. Provide an advertising package following all of current UDOT standards and regulations. Provide a consultant PM to support Bluffdale City and UDOT needs in project delivery, have qualified and experienced roadway designers for the project. Work task include survey, geotechnical evaluation, hydraulic design and culvert structures.

2. SCOPE DOCUMENTS:

Following are the scope items:

(a) Approval Memo

(b) Executive Summary

(c) Detailed Work Plan

(d) Personnel/Staffing Plan

(e) Schedule

(1) Completion: All work shall begin within seven (7) days of notice to proceed and shall be completed by January 21, 2018.

(2) Project/Contract Period: The project/contract will terminate January 21, 2018, unless otherwise extended or canceled in accordance with the terms and conditions of this contract. If additional time is required beyond the project completion date, the CONSULTANT shall submit a "Contract Time Extension Modification" to the LOCAL AUTHORITY and the DEPARTMENT'S Project Manager for approval and processing.

UDOT Consultant Services
Contract Approval Memo
Memo Printed on: June 21, 2016 1:26 PM

PM Approval Date: June 21, 2016 **UDOT PM:** Peter S. Tang

The Project Manager has reviewed and approved the contract/modification documents: Executive Summary, Work Plan, QC/QA Plan and Checklist, Staffing Plan, Work Schedule, and Cost Proposal.

PROJECT INFORMATION

PIN:	11986
Project No.:	F-LC35(241)
Job/Proj:	5409115D
PIN Description:	Porter Rockwell Blvd (5th Segment)

CONTRACT INFORMATION

CS Admin:	Devon Tonks
Contract No.:	New Preconstruction Engineering (Design)
Mod No.:	
Expiration Date:	January 21, 2018
Contract/Mod Amount:	$414,933.53
Fee Type:	COST PLUS FIXED FEE
Selection Method:	STREAMLINED RFQ
Period:	2013-2016 GE / LG
Phase:	PRELIMINARY ENGINEERING
Disciplines:	PRECONSTRUCTION ENGINEERING

CONTACTS

Consultant	Local Government
HORROCKS ENGINEERS, INC	Bluffdale City
Justin A. Beddoes	Michael Fazio
2162 WEST GROVE PKWY STE 400 PLEASANT GROVE, UT 84062	14350 S 2200 W BLUFFDALE, UT 84065 ,
	(801) 559-7781
	MFAZIO@BLUFFDALE.COM

UDOT Consultant Services
Local Government Approval Memo
Memo Printed on: June 21, 2016 1:26 PM

PROJECT INFORMATION

PIN:	11986
Project No.:	F-LC35(241)
Job/Proj:	5409115D
PIN Description:	Porter Rockwell Blvd (5th Segment)

CONTRACT INFORMATION

CS Admin:	Devon Tonks
Contract No.:	New Preconstruction Engineering (Design)
Mod No.:	
Expiration Date:	January 21, 2018
Contract/Mod Amount:	$414,933.53
Cumulative Amount:	$414,933.53
Fee Type:	COST PLUS FIXED FEE
Selection Method:	STREAMLINED RFQ
Period:	2013-2016 GE / LG
Phase:	PRELIMINARY ENGINEERING
Discipline:	PRECONSTRUCTION ENGINEERING

CONTACTS

Consultant	**Local Government**
HORROCKS ENGINEERS, INC	Bluffdale City
Justin A. Beddoes	Michael Fazio
2162 WEST GROVE PKWY STE 400	14350 S 2200 W
PLEASANT GROVE, UT 84062	BLUFFDALE, UT 84065
(801)763-5205 EXT:205	(801) 559-7781
justinb@horrocks.com	MFAZIO@BLUFFDALE.COM

I am aware of and approve the scope, schedule and budget as negotiatied by the Consultant for this contract and presented by the UDOT PM Peter S. Tang. I acknowledge UDOT has limits for Pool Contracts. The limit for this contract is Unlimited for the life of the contract, including any and all future modifications.

Michael Fazio — 21 JUNE 2016

Local Government Signature — **Date**

UDOT CMS Contract Executive Summary

Contract Number:	NEW	Mod:			
Project Number:	F-LC35(241)	PIN:	11986	UDOT Primary Contact:	Peter S. Tang
PIN Description:	Porter Rockwell Blvd (5th Segment)				

Brief Description

Executive Summary

Porter Rockwell (fifth segment) will be a new five-lane road beginning at the west end at Redwood Road and extending 0.46 miles to the east. The typical section will consist of
2-lanes in each direction with median and full outside shoulders. The side treatment will consist of curb and gutter,parkstrip and sidewalk or a pedestrian path. Two structures will be required for crossing the Utah Lake Distributing (ULD) Canal and the Utah and Salt Lake Canal in this segment.

Project Team

Horrocks Engineers will be the prime consultant.

IGES will be the subconsultant for geotechnical services.

Assumptions

ASSUMPTIONS:

1. Team Meetings - Team meetings will occur once every other week. There will be 9 team meetings held at the Bluffdale fire station.
2. Milestone Meeting - There will be 4 milestone meetings that will be held at UDOT Region Two. These meetings will be Kickoff Meeting, Geometry Review, Plan in Hand Review, and Plans, Specs, & Estimate (PS&E) Review.
3. Environmental - Environmental study is complete and no additional environmental work will be required.
4. Public Involvement - No public involvement tasks will be included. Hours will be included in the project management task to attend meetings with property owners or stakeholders and designers will provide design figures as needed.
5. Maintenance of Traffic (MOT) - A traffic analysis will be performed for the intersection of Redwood Road and Porter Rockwell Blvd to determine what limitations will be required for the contractor to follow during construction.
6. Intersection - Signal design will be included to modify the existing system to add the fourth leg to the

intersection of Redwood Road and Porter Rockwell Blvd.

7. Right-of-Way- The City of Bluffdale owns a 120 feet of right of way for the majority of this segment of Porter Rockwell Blvd. No ROW work documents will be prepared in this contract.During design if it's determined that ROW documents are necessary then it will be done by contract mod.

8. Roadway - Horrocks will design and prepare bidding documents for Porter Rockwell Blvd fifth segment.
9. Trail - trail tasks will be included in roadway tasks
10. Structures - The ULD canal crossing will be a box culvert;the Utah & Salt lake Canal crossing will be a bridge. A type selection report will be prepared to determine the preferred structure type for each canal crossing. No retaining wall design will be part of this contract.
11. Storm Drain - A new storm drain system will be designed and a new detention facility location will be identified and design for the storm drain outfall as part of this project. No tasks will be included for irrigation design.
12. New Utilities - Horrocks will design a new waterline and secondary waterline that will run parallel to Porter Rockwell Blvd.
13. Existing Utilities - Horrocks will perform Sub-surface Utility Engineering (SUE) to identify each utility to Quality level B, C, or D and coordinate with each utility owner. Horrocks has as-built plans for the water and secondary waterline that run parallel to Redwood Road that information will be used to obtain the necessary information for these lines. When potential impacts have been identified, Horrocks will perform test holes (SUE level A) to determine utility elevations. We have included 5 test holes in this contract.

Phasing

PROJECT PHASING

There will be no phasing for this project.

Fee Type

TYPE OF FEE

We propose to use the "Cost plus Fixed Fee" method for this contract based on the potential unknowns and the potential for schedule to change.

UDOT CMS Contract Work Plan

Contract Number:	NEW	Mod:			
Project Number:	F-LC35(241)	PIN:	11986	UDOT Primary Contact:	Peter S. Tang
PIN Description:	Porter Rockwell Blvd (5th Segment)				

Activity: 07L

1V1/ 1V2 Kickoff/ Scoping Meeting

Overview - Prepare for and hold the initial project team meeting. The purpose of the meeting is to introduce team members, to familiarize the team with the project, to review the proposed project scope, proposed schedule and proposed budget, and to commit to the project's success.

1. Prepare meeting agenda
2. Schedule meeting and send invitations
3. Hold meeting
4. Compile meeting notes
5. Develop communications plan
6. Develop project objective statement

Activity: 09L

1B1 Develop Base Mapping/Existing Surface

Overview - Obtain base mapping and topography for the entire project area. Following the Current Survey/ ROW Manual

1. Establish Survey Control. Control will meet UDOT Standards and GIS compatible with a geographic reprojection
2. Complete Survey Control Sheet
3. Perform Topographical Survey of Existing Features in Project Area
4. Develop Base Mapping
5. Develop DTM of the Existing Surface
6. Complete Certification

1J1 Identify Existing Right -of-Way

Overview - Existing ROW base map was started during the environmental phase, however new survey control will be required so the ROW base map will need to be updated.

1. Review ROW base map from environmental phase

2. Research Additional Parcels
3. Update ROW Base Map to meetcurrent UDOT standards and tie to new survey control
4. Initiate QC review

1S1 Identify Preliminary Structure Type (Minor & Major)

Overview - Review the existing conditions and determine the physical requirements for any new structures. Develop a range of alternative structure types to fulfill the requirements.

1. Meet with UDOT Structures Project Manager
2. Evaluate Feasible Alternatives
3. Perform QC

2U1 Utility & Railroad Identification

Overview - Identify all utility companies and complete an accurate depiction of existing utility facilities within the project limits along Redwood Road and PRB 5.

1. Identify Utility and Railroad Companies within Project Limits
   - SUE Level B is planned along SR-68 and PRB. Designate utilities to the highway right-of-way including traceable service laterals. If insufficient evidence or data exists to achieve a Level B survey,then Level C/D will be noted in this area in the CADD file. Also, will designate 50-feet past start and end of project limits.
   - Use UDOT CADD standards and provide the information in the .dgn file format.
   - Convert .dgn file format to GIS
2. Identify point of contact for each company for project design coordination.
3. Develop a Utility Companies Contacts List, which includes each contact's name, phone number, address, and email.
4. Notify Utility Companies of Project and Request Utility Records/Plans
   - Contact each utility company within the project limits. Provide each company with the following:
     - Project area and description
     - Request the records and plans of their facilities within the project limits
5. Hold Utility Scoping Meeting
   - Assist UDOT Team by attending a utility scoping meeting to discuss the project. This meeting is meant to include all potentially affected utility companies in one meeting.
6. Develop Subsurface Utility Engineering (SUE) Level B, C, and D
7. Coordinate with Survey Team
8. Review Horizontal Location with Utility Owner
   - Provide maps showing the horizontal utility location for all utility owners to review.
   - Address utility owners' review comments and resolve issues with the horizontal locations.
9. Develop utility relocation corridors and typical sections to determine utility spacing between relocated utilities, existing utilities, and proposed storm drain
10. Provide updated maps based on comment

11. Prepare and Issue authorization letters to third parties in UDOT ROW (Region 2)

2Q1 Develop Initial Roadway Drainage

Overview - Develop preliminary roadway drainage for PRB.

1. Conduct field review
2. Meet with maintenance on site
3. Develop drainage design criteria
4. Recommend drainage improvements
5. Provide preliminary drainage summary for scoping meeting
6. Develop hydrologic evaluation
7. Provide hydraulic analysis
8. Evaluate the need for storage facilities
9. Conduct conflict analysis
10. Coordinate with roadway team
11. Coordinate with survey team
12. Coordinate with utility team
13. Provide preliminary drainage layout
14. Update drainage cost estimate
15. Initiate QC review

2H1 Develop Initial Structure Hydraulics

Overview - Develop preliminary structure hydraulics for the ULD and Utah & Salt Lake Canals.

1. Develop Hydrologic Evaluation
2. Provide Hydraulic Analysis
3. Coordinate with Survey Team
4. Prepare Draft Structure Hydraulics Report
5. Coordinate with Central Hydraulics
6. Develop Preliminary Structures Hydraulics Cost Estimate
7. Initiate QC review

2R1 Model Initial Roadway Design

Overview - Develop Project Design Criteria. Determine the preliminary footprint and the recommended horizontal and vertical alignments for PRB by developing the initial roadway model

1. Develop Project Design Criteria (PDC)
2. Obtain Approval for PDC from Preconstruction Engineer
3. Assess existing conditions

4. Develop strategy to address deficiencies
5. Determine requirements for connecting to existing trails
6. Develop typical sections
7. Prepare horizontal and vertical alignments
8. Develop roadway model
9. Analyze roadway design
10. Prepare recommended alignment drawing
11. Prepare and submit design exception, waivers, and deviations from standards
12. Prepare cost estimate
13. Initiate QC review

2T1 Develop Initial Capacity Analysis

Overview - Provide the draft traffic analysis report outlining specific recommendations for improving existing capacity. Develop the travel demand model to forecast future volumes and develop alternatives to accommodate the existing,incremental, and future traffic volumes.

1. Review Traffic Master Plan
2. Develop Micro-Simulation Model
3. Provide Capacity Summary
4. Initiate QC review

Activity: 15L

2Y1 Prepare/ Compile Geometry Review Package

Overview - Compile comment resolutions, project cost estimate, and all discipline review materials to produce the Geometry Review Package.

1. Prepare comment resolution form
2. Review PDC
3. Compile project cost estimate

4. Prepare Geometry Review package

2V1 Geometry Review Meeting

Overview - This meeting is to review the recommended roadway alignments consistency, accuracy, and constructability within the project scope and discuss available funding. Prior to the meeting, determine the format of the design review.

1. Prepare meeting agenda
2. Distribute review package
3. Hold meeting
4. Prepare meeting notes
5. Update the Project Goals
6. Compile review meeting comments

Activity: 19L

3U1 Identify Utility Conflcits

Overview - Identify potential utility conflicts through coordination with utility owners and designers. Obtain preliminary relocation costs from utility owners.

1. Evaluate potential utility conflicts
2. Submit utility conflict matrix and design files to affected utility companies for review
3. Schedule and Hold utility information meeting
4. Develop and distribute meeting notes
5. Compile initial utility company cost estimates
6. Initiate QC review

3U2 Initial Design Utility Coordination

Overview - Conduct a utility design meeting to facilitate relocation solutions. Facilitate the development of utility owner relocation plans.

1. Reevaluate utility conflicts
2. Utility design meeting
3. Request utility owner plans, schedules, and cost estimates
4. Prepare utility agreements

3U3 Identify Utility Depth (SUE Level A)

Overview - Use the Utility Conflict Matrix/Summary to determine specific locations where vertical information could be used to avoid existing utility facility conflicts or assist utility companies design relocation plans.

1. Perform SUE Level A Exploration of Existing Utilities
2. Review and Verify SUE Level A MicroStation Files

3. Update utility line work in CAD and GIS with test hole information.

3U4 Complete Utility / Railroad Designs

Overview - Complete utility relocation designs for all utility relocations for which UDOT is responsible. Develop preliminary utility relocation plan sheets and cost estimate. This will include the design of a new waterline and a secondary waterline that will run parallel with PRB.

1. Coordinate with Project Team members
2. Coordinate with Utility Owners
3. Prepare and complete utility designs for all minor utilities
4. Develop preliminary utility plan sheets
5. Initiate QC Review

3Q1 Complete Roadway Drainage Design

Overview - Develop the roadway drainage and/or open channel drainage features.

1. Address comments from the 30% review
2. Prepare Drainage design
3. Develop plan and profile sheets
4. Prepare Cost Estimate
5. Preform QC review

3R1 Complete Roadway Design

Overview - Finalize the roadway model and design.Modify the design based on reviewer comments and continued coordination with project team members. Modify the design as necessary to include other discipline needs like drainage facilities, utilities, signal, signs, and ATMS. Create preliminary roadway plan sheets.

1. Address comments from the 30% review
2. Develop Roadway plan sheets
3. Develop typical section plan sheets
4. Prepare Design Exceptions, and Waivers and Update PDC
5. Prepare Cost Estimate
6. Preform QC review

3R2 Complete Signing and Striping Design

Overview - Using the roadway model as a guide,develop the signing and striping design for the project. Develop preliminary signing, striping, and MOT plan sheets.

1. Develop Signing and Striping Design
2. Create Preliminary Signing and Striping Plan Sheets
3. Develop Signing, Striping, Cost Estimate
4. Perform QC review

3R3 Complete Signal and Lighting Layout Design

Overview - The existing signal will be modified to accommodate the new east leg of PRB. The design of the signal will be according to the UDOT Design of Signalized Intersections Manual. Create preliminary signal plan sheets. Standard street lighting will be will be incorporated into the plans as per City standard with power source location, but lighting design will not be included. Create preliminary lighting plan sheets.

1. Identify Signal Requirements
2. Layout Signal Design
3. Create Preliminary Signal Plan Sheets
4. Layout Light Poles as per City standard
5. Create Preliminary Lighting Plan Sheets
6. Review ROW and Request Additional ROW as needed
7. Develop Signal Cost Estimate
8. Develop Lighting Cost Estimate
9. Preform QC review
10. Obtain Signal Design Acceptance

3S1 Develop Type Selection Report (TSR)

Overview - Determine bridge layout and geometry for design. Finalize the Type Selection Report and develop the Preliminary Seismic Strategy Report.

1. Develop Structure Criteria
2. Develop Structure Cross Section
3. Develop Preliminary Layout and Finalize Type Selection Report
4. Develop Preliminary Structures Cost Estimates
5. Develop Preliminary Seismic Strategy Report
5. Initiate QC review

3S2 Develop Situation and Layout (S&L)for Minor Structures

Overview - Develop the S&L sheets for minor structures (box culverts, headwalls, etc.), fully coordinating with the roadway geometric and hydraulic requirements.

1. Request Structure Number
2. Develop S&L Sheets
3. Provide Constructability Review
4. Prepare Initial Design Exceptions, Waivers, Deviations (If Applicable)
5. Initiate QC review

3S5 Develop Situation and Layout (S&L) for Bridge

Overview - Develop the draft S&L sheets to ensure the compatibility between the structures and roadway design.

1. Obtain Draft Hydraulic/ Scour Report if Applicable

2. Request Structure Number
3. Develop S&L Sheets
4. Provide Constructability Review
5. Prepare Initial Design Exceptions, Waivers, Deviations (If Applicable)
6. Initiate QC review

Activity: 21L

3Y1 Prepare, Compile Plan-in-Hand Package

Overview - Compile comment resolutions, project cost estimate, and all discipline review materials to produce the Plan-in-Hand Review Package.

1. Prepare final disposition review comment resolution form
2. Determine MOT needs during construction
3. Review PDC
4. Compile Project Cost Estimate
5. Prepare Plan-in-Hand review Package

3V1 Plan-in-Hand Review Meeting

Overview - The plan-in-hand review is for the final review of all major roadway, hydraulic, drainage,ITS, utility, geotechnical and ROW designs,which should be complete. The meeting should include reviews to determine available funding and consistency, accuracy, and constructability within the project scope.

1. Schedule Meeting
2. Prepare meeting agenda
3. Distribute review material
4. Hold meeting
5. Prepare meeting notes
6. Compile review meeting comments

Activity: 25L

4A1 Complete Erosion and Sediment Control Plans and Documents

Overview - Develop the project erosion and sediment control design. Complete the erosion and sediment control plans and create summaries. Prepare and assemble erosion and sediment control project documents, including plans, special provisions, and Engineer's Estimate in PDBS.

1. Design erosion and sediment control elements
2. Complete erosion and sediment control plan sheets

3. Complete erosion and sediment control detail sheets
4. Complete erosion and sediment summary sheets
5. Finalize erosion and sediment control cost estimate
6. Prepare erosion and sediment control project documents
7. Preform QC review

4Q1 Complete Drainage Plans and Documents

Overview - Prepare the drainage design based on the plan-in-hand review. Complete drainage plan set and documents. Finalize the hydraulics report.

1. Address review comments
2. Revise drainage design
3. Complete drainage plan and profile sheets
4. Complete drainage summary sheets
5. Finalize drainage cost estimate
6. Complete drainage project documents
7. Prepare drainage reports
8. Perform QC review

4H1 Complete Structure Hydraulic Design

Overview - Complete structure hydraulics design report.

1. Address review comments
2. Finalize Structure Hydraulic Analysis
3. Complete Scour Protection
4. Finalize Structure Hydraulics Report
5. Initiate QC review

4R1 Complete Roadway Plans and Documents

Overview - Following UDOT Plan Sheet Development Standards, complete the roadway plan and profile sheets and create roadway plan summaries, details, and additional plan sheets. Prepare and assemble roadway project documents. Finalize roadway cost estimate.

1. Address review comments
2. Finalize roadway design
3. Complete roadway plan and profile sheets
4. Finalize typical section sheets
5. Complete roadway detail sheets
6. Complete roadway summary sheets
7. Finalize cost estimate
8. Develop roadway project documents
9. Perform QC review

4R2 Complete Signing and Striping Plans and Documents

Overview - Following UDOT CADD and Plan Sheet Standards, finalize the signing and striping plan set and create summary sheets. Prepare and assemble the signing, striping, and MOT project documents, including measurement and payment,special provisions, acceptance and documentation, and final cost estimate.

1. Address review comments
2. Finalize Striping, Signing, and MOT Cost Estimate
3. Enter Cost Estimate in PDBS
4. Develop Signing, Striping, and MOT Project Documents
5. Perform QC review

4R3 Complete Signal and Lighting Plans and Documents

Overview - Following UDOT CADD Standards and UDOT Plan Sheet Development Standards and using templates found on the UDOT Signal and Lighting Design website,complete the signal and lighting plan sheets.

1. Address review comments
2. Finalize Signal Layout
3. Complete Signal Plan Sheets
4. Complete Signal Circuit Design and Plans Sheets
5. Complete Signal Schedule Sheets
6. Finalize Lighting Design
7. Complete Lighting Plans Sheets
8. Complete Lighting Details and Plan Sheets
9. Complete Lighting Summary Sheet
10. Develop Signal and Lighting Documents
11. Finalize Signal and Lighting Cost Estimate
12. Perform QC review
13. Obtain Signal and Lighting Design Approval

4SM Design & Detail Minor Structure

Overview - Design,detail, and check of the minor structure.

1. Coordinate Design with Hydraulics and Geotechnical Engineers
2. Design Box Culvert
3. Design Headwall
4. Design Wingwalls, Aprons, and Cutoff Walls
5. Develop Minor Structure Plans
6. Perform Load Ratings
7. Initiate QC Review

4SA Design & Detail Bridge

Overview - Based on the approved S&Ls and the structural design criteria, design, detail, and check the bridge. Incorporate design requirements and the preliminary information from the draft geotechnical report and/or the hydraulic report.

1. Provide Deck, Overhang, Approach Slabs, and Parapets Design
2. Design Beams
3. Design Bearing Pads
4. Determine Screed Elevations
5. Develop Superstructure Details
6. Determine Bridge Seat Elevations
7. Design Abutments
8. Design Foundations Develop Substructure Detail
9. Perform Seismic Analysis
10. Prepare Final Seismic Strategy Report
11. Perform Load Ratings
12. Initiate QC Review

4S4 Complete Structure Project Documents

Overview - Finalize the structure plans, calculations, special provisions, measure and payment,and estimate.

1. Finalize Structure Plans
2. Finalize Structure Calculations
3. Finalize Structure's Engineer's Estimate
4. Develop Special Provisions
5. Develop M&P and A&D
6. Initiate QC Review

4U1 Prepare and Obtain Utility and Railroad Agreements

Overview - Finalize Individual Utility Agreements, Cooperative Agreements, Construction and Maintenance Agreement, and Permits required for project advertisement and construction.

1. Complete Utility Agreements
2. Complete Cooperative Agreements
3. Provide Authorization to Proceed with Work for Utility Companies

4U2 Final Design UtilityCoordination

Overview - Final coordination with utility owners and provide guidance and information to complete utility relocation plans. Hold a meeting to resolve any remaining conflicts and prepare for the construction stage.

1. Prepare Utility Agreements

4U3 Complete Utility Plans and Documents

Overview - Complete utility plans and documents. This will include the design of a new waterline and a secondary waterline

that will run parallel with PRB.

1. Hold Final Utility Design Meeting
2. Review utility owner plans, schedules and cost estimates
3. Address review comments
4. Finalize Utility Relocation Design
5. Complete Utility Relocation Plan Sheets
6. Complete Relocation Summary Sheets

Activity: 29L

4Y1 Prepare / Compile PS&E Review Package

Overview - Compile comment resolutions, project cost estimate, and all discipline review materials to produce the PS&E Review Package.

1. Prepare final disposition review comment resolution form
2. Compile plan set sheets
3. Update cost estimate
4. Prepare special provisions
5. Prepare PS&E review package

4V1 Plans, Specifications, and Estimate (PS&E) Meeting

Overview - The purpose of this activity is to ensure that the elements provided in the plan sheets and advertising documents are consistent with the project scope and available funding requirements. The meeting should include reviews to determine consistency, accuracy, and constructability.

1. Schedule meeting
2. Prepare meeting agenda
3. Distribute review material
4. Hold meeting
5. Prepare meeting notes
6. Compile review meeting comments

Activity: 31L

5A1 Prepare SWPPP for Construction

Overview - Prepare the SWPPP package and submit to the Resident Engineer. This will be prepared and submitted to the contractor at the Pre-Construction meeting.

1. Assemble SWPPP package
2. Send SWPPP to Resident Engineer
3. Perform QC review

5L1 Deliver Right of Way Cert

Overview - Prepare documentation for ROW cert.

1. Ensure all ROW is cleared and project is ready for advertisement
2. Submit ROW Documentation Package

5S1 Deliver Final Structure Acceptance

Overview - Obtain the final acceptance to release the structural plans and documentation for advertising for the ULD and the Utah & Salt Lake Canal crossings.

1. Submit Structural Documentation Package

5T1 Deilver Traffic and Safety Cert

Overview - Prepare documentation for traffic cert.

1. Meet with the Region Traffic Engineer to review all traffic elements and that they meet MUTCD and UDOT standards
2. Submit traffic documentation Package

5U1 Deliver Utility Cert

Overview - Prepare documentation for utility cert.

1. Ensure that all Utility agreements are in place
2. Submit utility Documentation Package

5Y1 Incorporate PS&E Review Comments

Overview - Make revisions based on comments made during PS&E Review.

1. Prepare final Comment Resolution Form
2. Address comments from PS&E meeting
3. Revise Cost Estimate
4. Perform QC review
5. Compile final plan set and document package

5V1 Comment **Resolution Review Meeting**

Overview - Held in Region Two with UDOT Preconstruction, this meeting is to review the final comment resolution form. At the completion of this activity, all comment resolutions are to be accepted by the respective reviewer. There is to be

no review of the plans other than spot checks of proper comment incorporation.

1. Invite meeting attendees
2. Hold Meeting at Region Two with Preconstruction
3. Revise CRM form as needed
4. Perform final QC

5Z1 Project Management

Overview - This activity is for the Project Manager oversight of the project through the entire design phase. Monitor and provide updates on Scope, Schedule, and Budget. Track risks and action items

1. Prepare for and Hold 9 Team Meetings in Bluffdale at the fire station
2. Prepare meeting minutes from Team Meetings
3. Prepare for and Hold biweekly internal meetings; assume 9 meetings
4. Prepare Weekly Update to be sent by e-mail to project team; assume 18 updates
5. Prepare for and attend Property Owner/ Stakeholder Meetings with design/ figures; assume 4 meetings
6. Facilitate coordination between disciplines
7. Update The PRB project schedule on UDOT's MS Project biweekly
8. Review / Process Consultant Invoices

5Z2 Prepare, Submit & Process for Advertisement

Overview - Advertise the project for bid.

1. Obtain Advertising Checklist
2. Prepare Advertising Checklist
3. Assemble Advertising Package

6S1 Construction Support / Review

Overview - Provide construction support and review shop drawings.

1. Review Shop Drawings
2. Construction Responses
3. Final Structure Inspection

UDOT CMS Staffing Plan

Contract Number:	NEW	**Mod:**			
Project Number:	F-LC35(241)	**PIN:**	11986	**UDOT Primary Contact:**	Peter S. Tang
PIN Description:	Porter Rockwell Blvd (5th Segment)				

Employee Name	Contract Job Title	Education/Certification	License Number	Hours	Current Rate	Proposal Rate	Approval Date
HORROCKS, JAMES	SR PRINCIPAL ENGINEER, PE	BS	UT-165470	78	$80.81	$80.81	NTP
GRAHAM, DOUGLAS	PRINCIPAL ENGINEER II, PE	B.S.	UT-357733	22	$67.99	$67.99	NTP
VENTURA, BRENT	PRINCIPAL ENGINEER PE	MS	UT-270470-2202	112	$58.37	$58.37	NTP
BEDDOES, JUSTIN	SR ASSOCIATE PE	BS	UT-362173	154	$56.81	$56.81	NTP
ASH, KELLY	SR ASSOCIATE ENGINEER, PE	B.S.	UT-7366130	73	$50.77	$50.77	NTP
STONEBRAKER, DEREK	PRINCIPAL ENGINEER	MS	UT-8041451	291	$46.85	$46.85	NTP
CONLIN, SHAWN	SUE/UTILITIES MANAGER			32	$45.58	$45.58	NTP
PITTS, RYAN	SR ENVIRO SPECIALIST	MLA		12	$45.06	$45.06	NTP
HASLAM, ROBERT	ENGINEER PE	MS	UT-5048238	615	$44.48	$44.48	NTP
WOODIN, MARIE	SR LICENSED SURVEYOR	AS	UT-501193	23	$44.02	$44.02	NTP
BAGLEY, HEATHER	CADD SUPERVISOR	AS		83	$43.19	$43.19	NTP
OLSON, LONNIE	LICENSED SURVEYOR		UT-7736338-2201	23	$40.38	$40.38	NTP
O'BRYANT, JACOB	ENGINEER PE	BS	UT-7887805	106	$38.48	$38.48	NTP
OLSON, DALAN	ENGINEER	BS CIVIL	UT-8536367-2202	142	$37.27	$37.27	NTP
SHEETS, JORDAN	ENGINEER, PE	BS	UT-9636113-2202	98	$36.06	$36.06	NTP
CURTIS, ANTHONY	ENGINEER, PE	BS IN CIVIL ENGINEERING	UT-6116061-2202	212	$33.63	$33.63	NTP
DOWELL, ASHLEY	EIT II	BS		159	$33.58	$33.58	NTP
YOUD, TREVOR	EIT II			119	$31.73	$31.73	NTP
MISDOM, LEE	SR CADD TECHNICIAN	AS		372	$30.98	$30.98	NTP
POUNDER, SCOTT	SURVEY TECHNICIAN			44	$30.46	$30.46	NTP
LOVERIDGE, MATT	CADD TECH	ASSOC OF SCIENCE		4	$29.13	$29.13	NTP
HILL, KIM	CADD TECHNICIAN	BS		115	$27.06	$27.06	NTP
HERBERT, DAN	DESIGN TECHNICIAN	AS		137	$27.00	$27.00	NTP
FENN, JOSH	SUE TECHNICIAN	NA		44	$24.63	$24.63	NTP
WELLS, MARLENA	CADD TECH	AS		59	$23.94	$23.94	NTP

UDOT CMS Staffing Plan

Contract Number:	NEW	**Mod:**			
Project Number:	F-LC35(241)	**PIN:**	11986	**UDOT Primary Contact:**	Peter S. Tang
PIN Description:	Porter Rockwell Blvd (5th Segment)				

CARR, JOSEPH	SURVEY TECHNICIAN			68	$23.71	$23.71	NTP
BEAGLES, JAMES RICK	SUE			34	$19.96	$19.96	NTP
LAYCOCK, CATHY	ADMINISTRATIVE ASSISTANT			13	$19.38	$19.38	NTP
			Total Hours for HORROCKS ENGINEERS, INC:	3,244			

UDOT CMS Staffing Plan

Contract Number:	NEW	**Mod:**			
Project Number:	F-LC35(241)	**PIN:**	11986	**UDOT Primary Contact:**	Peter S. Tang
PIN Description:	Porter Rockwell Blvd (5th Segment)				

Alternate Staff

Employee Name	Contract Job Title	Education/Certification	License Number	Hours	Current Rate	Proposal Rate	Approval Date
OLSON, GREG	SR PRINCIPAL ENGINEER, PE	P.E.	UT-UT151503-2202	0	$70.72	$70.72	NTP
RICHINS, RYAN	ASSOCIATE ENGINEER, PE	BS	UT-5150137	0	$51.94	$51.94	NTP
HARRIS, DALEN	SR LICENSED SURVEYOR	AS	UT-166350-2201	0	$50.31	$50.31	NTP
CLAWSON, DAVID	TRANSPORTATION ENGINEER	BS	UT-7670856-2202	0	$45.35	$45.35	NTP
JENSEN, RAY	SR LICENSED SURVEYOR	AAS	UT-156196	0	$44.37	$44.37	NTP
WRIDE, RYAN	ENGINEER PE	BS	UT-8352953-2202	0	$43.62	$43.62	NTP
RICHINS, DUSTIN	ENGINEER PE	BS CIVIL	UT-8357754	0	$38.88	$38.88	NTP
WILLIS, TAWNI HILL	ENGIINEER, PE	BS	UT-8404859-2202	0	$37.27	$37.27	NTP
SIMMONS, DAVID	DESIGN ENGINEER	MASTERS	UT-8226945-2202	0	$36.87	$36.87	NTP
THURGOOD, DANIEL	ENGINEER PE	MS	UT-9625190-2202	0	$36.87	$36.87	NTP
KOLLER, DANIEL RYAN	TRANSPORTATION ENGINEER	MS	UT-9012305-2202	0	$35.65	$35.65	NTP
KINSEY, HEATHER	SR CADD TECH	AS		0	$34.56	$34.56	NTP
ASHTON, BRENDA	SR CADD TECH	AS		0	$29.42	$29.42	NTP
SOUTH, MIKE	TRAN TECH	AS		0	$29.13	$29.13	NTP
HOLMAN, SANDRA (GAY)	CLERICAL			0	$22.85	$22.85	NTP
LEWIS, NICHOLE	ADMINISTRATIVE ASSISTANT	NA		0	$18.40	$18.40	NTP
JAMESON, TARA	RECEPTIONIST/CLERICAL			0	$15.40	$15.40	NTP
FAWSON, DANELL	CLERICAL			0	$15.29	$15.29	NTP

ID	Task Mod	Activ No.	Task Name	Duration	Start	Finish
1			1 Anticipated NTP	1 day	Mon 7/11/16	Mon 7/11/16
2		07L	2 Kickoff Meeting	1 day	Tue 7/12/16	Tue 7/12/16
3		09L	3 Initial Design	19 days	Mon 7/11/16	Thu 8/4/16
4		15L	4 Geometry Review	8 days	Fri 8/5/16	Tue 8/16/16
5		15L	5 Geometry Complete	1 day	Tue 8/16/16	Tue 8/16/16
6		19L	6 Secondary Design	17 days	Wed 8/17/16	Thu 9/8/16
7		21L	7 Plan-in-Hand Review	8 days	Fri 9/9/16	Tue 9/20/16
8		21L	8 Plan-in-Hand Complete	1 day	Tue 9/20/16	Tue 9/20/16
9		25L	9 Final Design	15 days	Wed 9/21/16	Tue 10/11/16
10		29L	10 PS&E Review	10 days	Wed 10/12/1	Tue 10/25/16
11		29L	11 PS&E Complete	1 day	Tue 10/25/16	Tue 10/25/16
12		31L	12 Prepare Advertising Pac	5 days	Wed 10/26/1	Tue 11/1/16
13		31L	13 Submit for Advertiseme	1 day	Tue 11/1/16	Tue 11/1/16
14			14 Region and Complex Re	7 days	Wed 11/2/16	Thu 11/10/16
15			15 Bid Project	23 days	Fri 11/11/16	Tue 12/13/16
16			16 Bid Opening	1 day	Tue 12/13/16	Tue 12/13/16

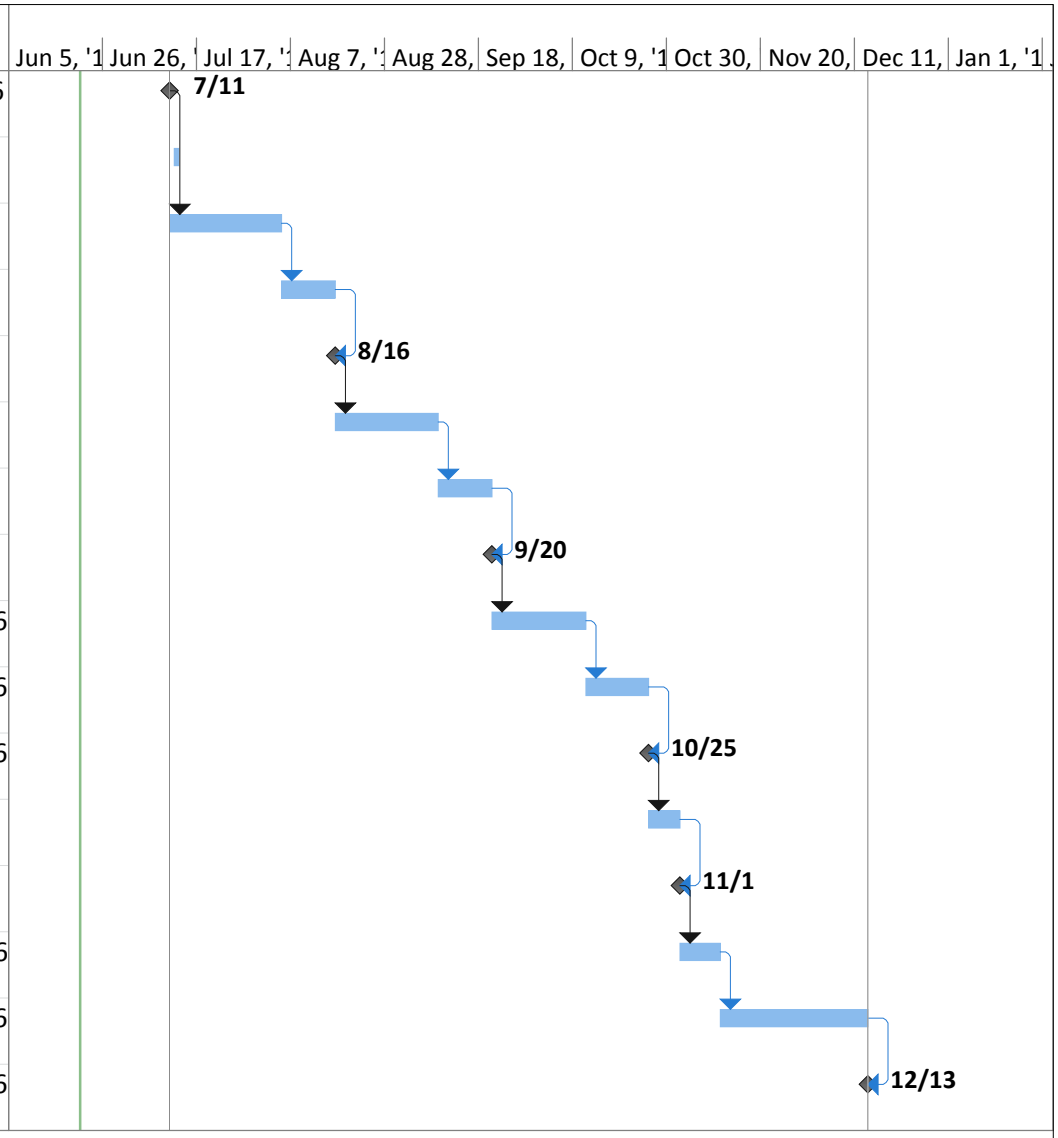

Project: PRB-5 Contract Schedule
Date: Tue 6/21/16

Task		Inactive Task		Start-only	
Split		Inactive Milestone		Finish-only	
Milestone		Inactive Summary		Deadline	
Summary		Manual Task		Progress	
Project Summary		Duration-only		Manual Progress	
External Tasks		Manual Summary Rollup			
External Milestone		Manual Summary			

FEES

COST PLUS A FIXED FEE
WITH FIXED TOTAL ADDITIVE RATE

1. **COST PLUS A FIXED FEE:** For all services and materials pertinent hereto and/or specifically described herein, except as otherwise explicitly cited, the LOCAL AUTHORITY agrees to pay the CONSULTANT for the actual allowable cost and the FIXED additives plus a fixed fee. Overhead rates have been reviewed, approved, and are limited to the costs which are allowable under Federal Acquisition Regulations, contained in Title 48 CFR, Part 31.

The contract cost includes direct labor expense, payroll additives; indirect costs and other direct non-salary costs as outlined below.

Guest meals (meals paid by a consultant or a consultant's employee for someone other than his/her self) shall not be eligible for reimbursement unless previously approved in writing by the DEPARTMENT Project Manager and the LOCAL AUTHORITY.

(a) The direct labor expense is the actual salary expense for professional and technical personnel and principals for the time they are productively engaged in work necessary to fulfill the terms of this contract. The payroll additives and indirect costs are FIXED as 150.64% of the direct salary expense.

(b) If necessary and DEPARTMENT approved, any additional direct expenses incurred in fulfilling the terms of this contract, including but not limited to travel and lodging, reproduction, telephone, equipment, supplies and fees of outside CONSULTANTS or sub-consultants will be reimbursed at actual costs.

If the CONSULTANT'S normal accounting practice is to include some of these costs as indirect expenses, then this contract will be consistent with that practice. These types of costs must be disclosed as part of your accounting practices and in conformance to Federal Cost Principles.

(c) The fixed fee has been determined and agreed upon as 11.00% of the combined estimated direct labor and the Overhead amount, which represents the CONSULTANT'S profit of $35,644.71. The fixed fee percentage is not a floating percent and should not be billed as a percent of labor. Rather, the fixed fee payment will be prorated and paid regularly in proportion to the percentage of work completed as reflected by the periodic invoices; that is, on the same ratio as the invoice cost bears to the originally estimated total for CONSULTANT'S actual cost which is the maximum amount payable minus the fixed fee. Any portion of the fixed fee payment not previously paid in the periodic payment will be covered in the final payment.

Overruns in the costs of the work do not warrant an increase in the fixed fee, but significant changes to the Scope of Work may require adjustment of the fixed fee in the contract as evidenced by a contract modification.

2. **MODIFICATIONS:** In the event the LOCAL AUTHORITY requires changes of services which materially affect the scope or work plan, with a resulting material increase in cost to the CONSULTANT, a contract modification for additional compensation and time for completion shall be entered into by the parties hereto prior to making such change. Any such work done without prior LOCAL AUTHORITY and the DEPARTMENT agreement shall be deemed ineligible for reimbursement by the DEPARTMENT. The LOCAL AUTHORITY will not entertain requests or claims for reimbursement and remuneration unless written approval is given prior to performance of the work.

3. **PROGRESS PAYMENTS:** Progress payments are based upon the approved percentage of work completed and are made pursuant to certified invoices received.

4. **INVOICES:** The CONSULTANT will submit monthly payment requests promptly and no later than 45 calendar days after each monthly billing cycle. Invoices are to reflect charges as they apply to the appropriate contract, project, and account number, and must be certified and executed by an official legally authorized to bind the firm. The invoice must be substantiated with appropriate supporting documentation such as time sheets, labor reports, or cost accounting system print-out of employee time,

receipts for direct expenses, and subconsultant invoices and supporting documentation that is reviewed and approved by the DEPARTMENT'S Project Manager and subject to final approval by the DEPARTMENT'S Comptroller's Office.

Payment requests for services performed on or before the last day of the Utah fiscal year (June 30), must be submitted no later than 30 calendar days after the billing cycle, see Utah Code Ann. § 63J-1-601.

The CONSULTANT acknowledges untimely billing may adversely affect the LOCAL AUTHORITY and DEPARTMENT due to federal funding requirements in 49 CFR § 18.23, and/or the state fiscal constraints imposed upon it as a department of state government by Title 63J, Chapter 1, Budgetary Procedures Act. The CONSULTANT waives payment, and waives the right to bring action in law or in equity to recover payment for services, for any and all payment requests the DEPARTMENT does not receive from the CONSULTANT within the timeframe provided under this contract. *(Provision revised June 27, 2012.)*

5. **FINAL PAYMENT:** Final invoice payment will be released only after all materials and services associated with this contract have been reviewed and approved by the DEPARTMENT'S Project Manager and finalized by the DEPARTMENT'S Comptroller's Office. The final invoice payment will not be released until a project evaluation form has been completed by the LOCAL AUTHORITY and the DEPARTMENT'S Project Manager and submitted to Consultant Services and the Comptroller's Office.

The DEPARTMENT'S Project Managers and the Comptroller's Office have the right to hold the final payment on certain projects when design and construction are performed by two separate Consultants or if there is a potential possibility of a design or construction error. The DEPARTMENT Comptroller's Office also has the right to hold the final invoice payment until the final audit is complete upon the request of the DEPARTMENT Project Manager.

6. **FINANCIAL SUMMARY:** The total maximum amount of disbursement pertinent to this contract shall not exceed $414,933.53 Contract overruns will not be paid.

7. **COST PROPOSAL:** The overhead rate shown in the CONSULTANT'S and/or sub-consultant's cost proposal has been determined and agreed upon by the parties and is included in this contract. The CONSULTANT will invoice the DEPARTMENT using the actual Wage Rates, FIXED Overhead, prorated Fixed Fee, and any additional Direct Costs. Invoices submitted to the DEPARTMENT must reflect the staffing plan and associated hourly wage rates, labor hours used, and other costs submitted in the CONSULTANT cost proposal.

UDOT CMS Cost Proposal

Contract Number:	NEW	**Mod:**			
Project Number:	F-LC35(241)	**PIN:**	11986	**UDOT Primary Contact:**	Peter S. Tang
PIN Description:	Porter Rockwell Blvd (5th Segment)				

Labor Costs

Employee Name	Contract Job Title	Hours	Proposal Rate	Labor Cost
ASH, KELLY	SR ASSOCIATE ENGINEER, PE	73	$50.77	$3,706.21
BAGLEY, HEATHER	CADD SUPERVISOR	83	$43.19	$3,584.77
BEAGLES, JAMES RICK	SUE	34	$19.96	$678.64
BEDDOES, JUSTIN	SR ASSOCIATE PE	154	$56.81	$8,748.74
CARR, JOSEPH	SURVEY TECHNICIAN	68	$23.71	$1,612.28
CONLIN, SHAWN	SUE/UTILITIES MANAGER	32	$45.58	$1,458.56
CURTIS, ANTHONY	ENGINEER, PE	212	$33.63	$7,129.56
DOWELL, ASHLEY	EIT II	159	$33.58	$5,339.22
FENN, JOSH	SUE TECHNICIAN	44	$24.63	$1,083.72
GRAHAM, DOUGLAS	PRINCIPAL ENGINEER II, PE	22	$67.99	$1,495.78
HASLAM, ROBERT	ENGINEER PE	615	$44.48	$27,355.20
HERBERT, DAN	DESIGN TECHNICIAN	137	$27.00	$3,699.00
HILL, KIM	CADD TECHNICIAN	115	$27.06	$3,111.90
HORROCKS, JAMES	SR PRINCIPAL ENGINEER, PE	78	$80.81	$6,303.18
LAYCOCK, CATHY	ADMINISTRATIVE ASSISTANT	13	$19.38	$251.94
LOVERIDGE, MATT	CADD TECH	4	$29.13	$116.52
MISDOM, LEE	SR CADD TECHNICIAN	372	$30.98	$11,524.56
O'BRYANT, JACOB	ENGINEER PE	106	$38.48	$4,078.88
OLSON, DALAN	ENGINEER	142	$37.27	$5,292.34
OLSON, LONNIE	LICENSED SURVEYOR	23	$40.38	$928.74
PITTS, RYAN	SR ENVIRO SPECIALIST	12	$45.06	$540.72
POUNDER, SCOTT	SURVEY TECHNICIAN	44	$30.46	$1,340.24
SHEETS, JORDAN	ENGINEER, PE	98	$36.06	$3,533.88
STONEBRAKER, DEREK	PRINCIPAL ENGINEER	291	$46.85	$13,633.35
VENTURA, BRENT	PRINCIPAL ENGINEER PE	112	$58.37	$6,537.44
WELLS, MARLENA	CADD TECH	59	$23.94	$1,412.46
WOODIN, MARIE	SR LICENSED SURVEYOR	23	$44.02	$1,012.46
YOUD, TREVOR	EIT II	119	$31.73	$3,775.87
	Total Hours:	3,244		
	Total Direct Labor:			$129,286.16
	Overhead:		150.64%	$194,756.67
	Total Direct Labor plus Overhead:			$324,042.83
	Fixed Fee:		11.00%	$35,644.71
	Burdened Labor Cost:			$359,687.54

Other Direct Charges

ODC Item	Unit of Measure	Qty	Item Cost	Extended Cost
0.5186% OF LABOR	LUMP	671.0	$1.000	$671.00
COMPANY VEH MILEAGE RATE 2016	MILE	2,075.0	$.520	$1,079.00
PERSONAL VEH MILEAGE RATE 2016	MILE	500.0	$.540	$270.00
TITLE SEARCH	EACH	8.0	$100.000	$800.00
			Total Other Direct Charges:	$2,820.00

Sub Consultant Costs

UDOT CMS Cost Proposal

Contract Number:	NEW	**Mod:**			
Project Number:	F-LC35(241)	**PIN:**	11986	**UDOT Primary Contact:**	Peter S. Tang
PIN Description:	Porter Rockwell Blvd (5th Segment)				

Firm Name	Sub Total Cost
INTERMOUNTAIN GEOENVIRONMENTAL SERVICES (IGES)	$52,425.98
Total Sub Consultant Costs:	$52,425.98
Total Contract Cost:	**$414,933.53**

UDOT CMS Hours Derivation

Contract Number:	NEW	**Mod:**			
Project Number:	F-LC35(241)	**PIN:**	11986	**UDOT Primary Contact:**	Peter S. Tang
PIN Description:	Porter Rockwell Blvd (5th Segment)				

Employee Name	07L	09L	15L	19L	21L	25L	29L	31L								Total
HORROCKS, JAMES	7	0	4	0	6	1	6	54								78
GRAHAM, DOUGLAS	0	4	0	4	0	6	0	8								22
VENTURA, BRENT	3	18	1	34	6	20	5	25								112
BEDDOES, JUSTIN	10	2	7	2	14	3	12	104								154
ASH, KELLY	3	5	1	7	7	9	6	35								73
STONEBRAKER, DEREK	3	10	1	51	5	129	5	87								291
CONLIN, SHAWN	0	24	0	8	0	0	0	0								32
PITTS, RYAN	0	4	0	0	0	0	0	8								12
HASLAM, ROBERT	0	12	1	112	0	408	0	82								615
WOODIN, MARIE	0	19	0	0	0	0	0	4								23
BAGLEY, HEATHER	0	0	0	28	4	50	0	1								83
OLSON, LONNIE	0	23	0	0	0	0	0	0								23
O'BRYANT, JACOB	3	27	3	5	6	30	5	27								106
OLSON, DALAN	0	19	1	86	2	30	0	4								142
SHEETS, JORDAN	3	18	7	10	9	19	7	25								98
CURTIS, ANTHONY	0	0	1	38	0	171	0	2								212
DOWELL, ASHLEY	0	11	1	48	4	62	8	25								159
YOUD, TREVOR	0	38	5	26	2	46	0	2								119
MISDOM, LEE	0	8	0	116	0	248	0	0								372
POUNDER, SCOTT	0	44	0	0	0	0	0	0								44
LOVERIDGE, MATT	0	4	0	0	0	0	0	0								4
HILL, KIM	0	20	4	40	4	40	2	5								115
HERBERT, DAN	0	38	1	36	2	50	0	10								137
FENN, JOSH	0	40	0	4	0	0	0	0								44
WELLS, MARLENA	0	6	0	24	0	27	2	0								59

UDOT CMS Hours Derivation

Contract Number:	NEW	**Mod:**			
Project Number:	F-LC35(241)	**PIN:**	11986	**UDOT Primary Contact:**	Peter S. Tang
PIN Description:	Porter Rockwell Blvd (5th Segment)				

Employee Name	07L	09L	15L	19L	21L	25L	29L	31L								Total
CARR, JOSEPH	0	68	0	0	0	0	0	0								68
BEAGLES, JAMES RICK	0	34	0	0	0	0	0	0								34
LAYCOCK, CATHY	1	0	0	0	2	8	1	1								13

UDOT CMS Hours Derivation

Contract Number:	NEW	**Mod:**			
Project Number:	F-LC35(241)	**PIN:**	11986	**UDOT Primary Contact:**	Peter S. Tang
PIN Description:	Porter Rockwell Blvd (5th Segment)				

	07L	09L	15L	19L	21L	25L	29L	31L								Total
Firm Activity Totals:	33	496	38	679	73	1,357	59	509								3,244
	07L	**09L**	**15L**	**19L**	**21L**	**25L**	**29L**	**31L**								**Total**
Transaction Activity Totals:	33	1,016	38	679	73	1,357	59	509								3,764

UDOT CMS Contract Work Plan

Contract Number:	NEW	Mod:			
Project Number:	F-LC35(241)	PIN:	11986	UDOT Primary Contact:	Peter S. Tang
PIN Description:	Porter Rockwell Blvd (5th Segment)				

Activity: 09L

Geotechnical Investigation, laboratory testing and analysis for new segment of roadway, bridge and box culvert. Pavement design to be performed by UDOT.

UDOT CMS Staffing Plan

Contract Number:	NEW	**Mod:**			
Project Number:	F-LC35(241)	**PIN:**	11986	**UDOT Primary Contact:**	Peter S. Tang
PIN Description:	Porter Rockwell Blvd (5th Segment)				

Employee Name	Contract Job Title	Education/Certification	License Number	Hours	Current Rate	Proposal Rate	Approval Date
WALLACE, JOHN	ENGINEER - PRINCIPAL	BS MS PE	UT-157987-2202	20	$62.40	$62.40	NTP
MICKELSON, BRETT	ENGINEER-PRINCIPAL	BS PE	UT-173164	8	$48.08	$48.08	NTP
SEELY, DANIEL	ENGINEER - SOILS LAB DIRECTOR	BS ME PE	UT-7872141-2202	22	$46.44	$46.44	NTP
GREEN, JOAN	PE	BS		200	$29.81	$29.81	NTP
BEST, DARRELL (NICK)	EIT AND SOILS LAB SUPERVISOR	BS		33	$29.13	$29.13	NTP
FLANNERY, JEROLD	EIT/STAFF ENGINEER	BSCE		80	$27.16	$27.16	NTP
PAP, DIANN	ADMIN ASST	BS		29	$23.07	$23.07	NTP
THOMAS, ERIC	FIELD/LAB TECH	BS-GEOLOGY		60	$20.00	$20.00	NTP
RICE, BONNIE	LAB TECH SR	HS		28	$20.00	$20.00	NTP
SIEBACH, DAVID	FIELD TECH	HS		40	$19.00	$19.00	NTP
Total Hours for INTERMOUNTAIN GEOENVIRONMENTAL SERVICES (IGES):				520			

UDOT CMS Cost Proposal

Contract Number:	NEW	**Mod:**			
Project Number:	F-LC35(241)	**PIN:**	11986	**UDOT Primary Contact:**	Peter S. Tang
PIN Description:	Porter Rockwell Blvd (5th Segment)				

Labor Costs

Employee Name	Contract Job Title	Hours	Proposal Rate	Labor Cost
BEST, DARRELL (NICK)	EIT AND SOILS LAB SUPERVISOR	33	$29.13	$961.29
FLANNERY, JEROLD	EIT/STAFF ENGINEER	80	$27.16	$2,172.80
GREEN, JOAN	PE	200	$29.81	$5,962.00
MICKELSON, BRETT	ENGINEER-PRINCIPAL	8	$48.08	$384.64
PAP, DIANN	ADMIN ASST	29	$23.07	$669.03
RICE, BONNIE	LAB TECH SR	28	$20.00	$560.00
SEELY, DANIEL	ENGINEER - SOILS LAB DIRECTOR	22	$46.44	$1,021.68
SIEBACH, DAVID	FIELD TECH	40	$19.00	$760.00
THOMAS, ERIC	FIELD/LAB TECH	60	$20.00	$1,200.00
WALLACE, JOHN	ENGINEER - PRINCIPAL	20	$62.40	$1,248.00
	Total Hours:	520		
	Total Direct Labor:			$14,939.44
	Overhead:		136.45%	$20,384.87
	Total Direct Labor plus Overhead:			$35,324.31
	Fixed Fee:		11.00%	$3,885.67
	Burdened Labor Cost:			$39,209.98

Other Direct Charges

ODC Item	Unit of Measure	Qty	Item Cost	Extended Cost
CL - CONETEC INC	JOB	6.0	$2,000.000	$12,000.00
MOBE-DEMOBE 2016	LUMP	4.0	$250.000	$1,000.00
COMPANY VEHICLE MILEAGE 2016	MILE	400.0	$.540	$216.00
			Total Other Direct Charges:	$13,216.00
			Total Cost for INTERMOUNTAIN GEOENVIRONMENTAL SERVICES (IGES):	**$52,425.98**

UDOT CMS Hours Derivation

Contract Number:	NEW	**Mod:**			
Project Number:	F-LC35(241)	**PIN:**	11986	**UDOT Primary Contact:**	Peter S. Tang
PIN Description:	Porter Rockwell Blvd (5th Segment)				

Employee Name	09L															Total
WALLACE, JOHN	20															20
MICKELSON, BRETT	8															8
SEELY, DANIEL	22															22
GREEN, JOAN	200															200
BEST, DARRELL (NICK)	33															33
FLANNERY, JEROLD	80															80
PAP, DIANN	29															29
THOMAS, ERIC	60															60
RICE, BONNIE	28															28
SIEBACH, DAVID	40															40

UDOT CMS Hours Derivation

Contract Number:	NEW	**Mod:**			
Project Number:	F-LC35(241)	**PIN:**	11986	**UDOT Primary Contact:**	Peter S. Tang
PIN Description:	Porter Rockwell Blvd (5th Segment)				

	09L															**Total**
Firm Activity Totals:	520															520

Insurance

As stated in Attachment B - Standard Terms and Conditions, services to be provided by the CONSULTANT under this contract are required to be covered by insurance. Insurance shall be maintained in force until all activities which are required by this contract or as changed by contract modification are completed and accepted by the DEPARTMENT.

Insurance	Waived	Expiration Date	Insurance Carrier	Policy Number	Each Occurrence Limit	General Aggregate Limit	Additional Endorsement
AUTOMOBILE LIABILITY	N	7/1/2016	HARTFORD CASUALTY INSURANCE	34UENVT0962	$1,000,000	$0	Y
EXCESS/UMBRELLA LIABILITY	N	7/1/2016	TRAVELERS INDEMNITY COMPANY	CUP6667Y094	$5,000,000	$5,000,000	N
GENERAL LIABILITY	N	7/1/2016	TRAVELERS INDEMNITY OF CT	6802559L570	$1,000,000	$2,000,000	Y
HEALTH INSURANCE HB 331-2009	N	3/2/2017	UNITED HEALTH	753488	$0	$0	N
PROFESSIONAL LIABILITY	N	7/1/2016	XL SPECIALTY INSURANCE CO	DPR9721993	$10,000,000	$10,000,000	N
WORKERS COMPENSATION	N	7/1/2016	HARTFORD FIRE INSURANCE CO	34WEBL8334	$1,000,000	$0	N

CITY OF BLUFFDALE, UTAH
RESOLUTION NO. 2016-____

A RESOLUTION OF THE BLUFFDALE CITY COUNCIL AUTHORIZING THE CITY MANAGER TO EXECUTE A LOCAL GOVERNMENT CONTRACT BETWEEN THE UTAH DEPARTMENT OF TRANSPORTATION ("UDOT") AND THE CITY OF BLUFFDALE FOR DESIGN OF SEGMENT 5 OF THE PORTER ROCKWELL BOULEVARD.

WHEREAS the City of Bluffdale ("City") has undertaken the design and construction of Porter Rockwell Boulevard;

WHEREAS the City has been awarded a federal grant for the design and construction of Segment 5 of the Porter Rockwell Boulevard; and

WHEREAS UDOT will administer the design and construction of Segment 5 and disburse the grant funds pursuant to the proposed the Local Government Contract, attached hereto;

NOW, THEREFORE, BE IT RESOLVED BY THE CITY COUNCIL OF THE CITY OF BLUFFDALE AS FOLLOWS:

Section 1. **Authorization to Execute Agreement.** The City Council hereby authorizes and directs the City Manager to execute a Local Government Contract between the Utah Department of Transportation and the City of Bluffdale for the design of Porter Rockwell Boulevard, Segment 5.

Section 2. **Effective Date.** This Resolution shall become effective immediately upon its passage and the City Council authorizes and directs the Mayor to execute and cause to be delivered the same.

PASSED, ADOPTED AND APPROVED: July 13, 2016.

_____
Mayor Derk P. Timothy

ATTEST: [seal]

_____
Wendy Deppe, City Recorder

Voting by the City Council:	Aye	Nay
Councilmember Jackson	_____	_____
Councilmember Nielsen	_____	_____
Councilmember Preece	_____	_____
Councilmember Westwood	_____	_____
Councilmember Wingate	_____	_____

Agenda Item 3.5

BLUFFDALE

14175 Redwood Road, Bluffdale, Utah 84065; Tel. 801-559-7781; mfazio@bluffale.com

Memo

Date: 8 July 2016

From: Michael Fazio, P.E.

To: Mark Reid, City Manager
Mayor Timothy
City Council

CC:

RE: Agreement with UDOT to Allow the City to Build a Roundabout at Noell Nelson Drive and 14600 South and to Install a Signal Light at the Rail Road and 14600 South Underpass Crossing

---

The City Council approved the construction of the new roundabout at Noell Nelson Drive and 14600 South and the new traffic signal installation at the rail road underpass of 14600 South. UDOT, currently owning 14600 South, requires that any encroachments or changes to their facilities be permitted and that an agreement that stipulates the conditions for the construction improvements be in place.

This agreement established the responsibilities of UDOT and the City for the completion of the improvements hereto referenced.

It is recommended to approve the agreement and to authorize Mayor Timothy or other designee to sign the agreement.

CITY OF BLUFFDALE, UTAH
RESOLUTION NO. 2016-____

A RESOLUTION OF THE BLUFFDALE CITY COUNCIL AUTHORIZING THE MAYOR TO ENTER INTO A COOPERATIVE AGREEMENT BETWEEN THE UTAH DEPARTMENT OF TRANSPORTATION AND THE CITY OF BLUFFDALE FOR A NEW TRAFFIC SIGNAL AND ROUNDABOUT INSTALLATION ON 14600 SOUTH AT THE RAILROAD CROSSING AND 1000 WEST.

WHEREAS UDOT has jurisdiction over the right-of-way for 14600 South (SR-140);

WHEREAS the City desires to install a new signal at the railroad bridge and construct roundabout at 1000 West (Noell Nelson Drive); and

WHEREAS UDOT is willing to permit the signal and roundabout installation at these locations according to the provisions set forth in the attached Cooperative Agreement; and

WHEREAS the City will construct and maintain the signal and roundabout;

NOW, THEREFORE, BE IT RESOLVED BY THE CITY COUNCIL OF THE CITY OF BLUFFDALE AS FOLLOWS:

Section 1. **Authorization to Execute Agreement.** The City Council hereby authorizes and directs the Mayor to enter into a Cooperative Agreement between the Utah Department of Transportation and the City of Bluffdale for a New Signal and Roundabout Installation on 14600 South at the Railroad Crossing and 1000 West.

Section 2. **Effective Date.** This Resolution shall become effective immediately upon its passage and the City Council authorizes and directs the Mayor to execute and cause to be delivered the same.

PASSED, ADOPTED AND APPROVED: July 13, 2016.

_____
Mayor Derk P. Timothy

ATTEST: [seal]

_____
Wendy Deppe, City Recorder

Voting by the City Council:	Aye	Nay
Councilmember Jackson	_____	_____
Councilmember Nielsen	_____	_____
Councilmember Preece	_____	_____
Councilmember Westwood	_____	_____
Councilmember Wingate	_____	_____

COOPERATIVE AGREEMENT
BETWEEN
THE UTAH DEPARTMENT OF TRANSPORTATION AND CITY OF BLUFFDALE
FOR
A NEW SIGNAL AND ROUNDABOUT INSTALLATION ON
14600 SOUTH AT THE RAILROAD CROSSING AND 1000 WEST

THIS COOPERATIVE AGREEMENT made and entered into this _____ day of _____, 2016 by and between the UTAH DEPARTMENT OF TRANSPORTATION, an agency of the State of Utah, ("UDOT") and CITY OF BLUFFDALE, a municipal corporation of the State of Utah ("City"). UDOT and County may be referred to as the "Parties."

RECITALS

WHEREAS, UDOT has jurisdiction over the right-of-way for 14600 South (SR-140); and

WHEREAS, the City wishes to install a new signal at the railroad bridge and a roundabout at 1000 West (Noell Nelson Drive); and

WHEREAS, UDOT is willing to permit the signal and roundabout installation at these locations according to the provisions set forth in this Cooperative Agreement; and

WHEREAS, the City will construct and maintain the signal and roundabout as described herein.

THIS AGREEMENT is made to set forth the terms and conditions where under the work and maintenance shall be performed.

AGREEMENT

NOW THEREFORE, the Parties agree as follows:

1. UDOT will grant temporary construction access on 14600 South and 1000 West (Noell Nelson Drive) and at the railroad bridge (outside of the railroad right-of-way) to the City for the sole purpose of installing a signal and roundabout as described in Exhibit "A" that is incorporated by reference.

2. The City will be responsible for all construction materials, maintenance, and repairs to the signal and roundabout as shown in "Exhibit A" and at no cost to UDOT. The City will construct the signal and roundabout in strict compliance with the UDOT approved plans.

    a. Access to the signal and roundabout for routine maintenance shall only be permitted in accordance with Paragraph 4.

b. Any utilities which may be affected by the installation of the signal and roundabout shall be avoided or relocated by the City and at the City's expense.
c. This Agreement in no way cancels or negates a utility owner, including UDOT, from entering the right-of-way to construct, reconstruct, repair, maintain, or inspect its facilities.
d. The City and its representatives shall abide by all applicable State and Federal laws, rules and regulations pertaining to safety and traffic control found in the Manual of Uniform Traffic Control Devices in the construction, maintenance and repair of the signal and roundabout.
e. UDOT personnel have the right, but not the obligation, to monitor and inspect the construction of the signal and roundabout. Any UDOT review or inspection does not relieve the City of its duty to construct the signal and roundabout in compliance with the plan or this Cooperative Agreement.
f. Once the signal is installed, UDOT will maintain the signal until the jurisdictional transfer to the City is complete.
g. UDOT will be responsible for snow plowing of the 14600 South entrances and exits from roundabout. The City will be responsible for snow plowing on the entrance and exit from Noell Nelson Drive. This will be in place until the jurisdictional transfer to the City is complete.
h. No debris or building material will be allowed at any time within the UDOT right-of-way.
i. Landscaping improvement and maintenance is included in this Agreement.
j. This Agreement does give the City permission to place any signal equipment and the roundabout outside of the UDOT-owned right-of-way. The City shall secure any and all permits/rights needed to secure additional private rights-of-way at its sole cost.

3. UDOT is the owner of the right-of-way on which the signal and roundabout will be installed. Before City makes any changes to the area where the signal and roundabout are installed, City will notify the Region Two Permits office for review and approval. City will strictly comply with the permit requirements. **IF UDOT REASONABLY DETERMINES THAT THE SIGNAL AND ROUNDABOUT BECOMES A HAZARD, UDOT WILL NOTIFY THE CITY TO REMOVE THEM AT THE CITY'S EXPENSE.**

4. Access for construction, maintenance and servicing of the City's signal and roundabout located on the UDOT right-of-way shall be allowed only by a permit issued by UDOT to the City. The City will obtain the permit and abide by all conditions for policing and other controls in conformance with Utah Administrative Codes R-930-6 and R-930-7, as amended.

5. Both Parties are governmental entities as defined in the Utah Governmental Immunity Act (the "Act"). Nothing in this Cooperative Agreement shall be deemed as a waiver by either or both Parties of any defenses or protections provided by the Act. City agrees to indemnify, defend, and save harmless UDOT from and against all claims, suits and costs, including attorneys' fees for injury or damage of any kind, arising out of its negligent acts, errors or omissions of its officers, agents, contractors or employees in the

performance of this Cooperative Agreement. The City shall indemnify, defend, and save harmless UDOT for any claims due to the existence of the signal and roundabout located on UDOT's right-of-way. Nothing in this paragraph is intended to create additional rights to third parties. The obligation to indemnify is limited to the dollar amounts set forth in the Governmental Immunity Act. This provision shall survive the termination of this Cooperative Agreement.

6. UDOT is not abandoning any rights or interests in the right-of-way for transportation purposes as defined in Utah Code Section 72-5-102. If UDOT requires the right-of-way for transportation purposes, UDOT will give the City 30 day's written notice of the termination of this Cooperative Agreement.

7. This Cooperative Agreement shall constitute the entire agreement and understanding of the Parties with respect to the subject matter hereof, and shall supersede all offers, negotiations and other agreements with respect thereto. This Cooperative Agreement shall be governed by the laws of the State of Utah both as to interpretation and performance. This Cooperative Agreement does not create any type of agency relationship, joint venture, or partnership between UDOT and City. Any amendment to this Cooperative Agreement must be in writing and executed by the authorized representatives of each Party. Each Party represents that it has the authority to enter into this Cooperative Agreement. This Cooperative Agreement may be executed in any number of counterparts and by each of the Parties hereto on separate counterparts, each of which when so executed and delivered shall be an original, but all such counterparts shall together constitute but one and the same instrument. Any signature page of this Cooperative Agreement may be detached from any counterpart and reattached to any other counterpart hereof. The facsimile transmission of a signed original of this Cooperative Agreement or any counterpart hereof and the retransmission of any signed facsimile transmission hereof shall be the same as delivery of an original.

IN WITNESS WHEREOF, the parties hereto have caused these presents to be executed by its duly authorized officer as of the day and year first above written.

CITY OF BLUFFDALE,
a Municipal Corporation of the State of Utah

Attest:

Title:

City Recorder

Date:

Attorney for City of Bluffdale

. . . . . .

RECOMMENDED FOR APPROVAL:

UTAH DEPARTMENT OF TRANSPORTATION

Title: Traffic Operations Engineer

Title: Region Director

Date:

Date:

Approved as to Form

Title: Assistant Attorney General

Date:

UDOT Comptroller Office

Contract Administrator

Agenda Item 4

Bluffdale Fire Department

Medical Statistics Report

195 Medical Calls

11/1/2015 – 04/30/2016

Medical Statistics Report

Medical Calls We Responded to by City

City	# of Runs	% of Runs
BLUFFDALE	147	76%
RIVERTON	21	11%
DRAPER	19	9%
HERRIMAN	6	3%
INTERSTATE	2	1%
Total	195	100%

Medical Statistics Report

Most Calls by Time Period and by Day of Week on Average

Time Period	Sun	Mon	Tues	Wed	Thur	Fri	Sat	Total	%
0000 - 0400	5	2	3	0	2	3	3	18	9.23%
0400 - 0800	2	1	1	1	6	1	6	18	9.23%
0800 - 1200	1	13	2	6	3	9	8	42	21.54%
1200 - 1600	9	7	7	9	5	6	6	49	25.13%
1600 - 2000	5	6	9	5	10	10	5	50	25.64%
2000 - 2400	3	0	2	3	2	2	6	18	9.23%
Total	25	29	24	24	28	31	34	195	100%

Medical Statistics Report

Call Type and Number of Calls Reported by Dispatch

Dispatch Reason	# of Calls	% of Calls	Dispatch Reason	# of Calls	% of Calls
Traffic Accident	50	25.64%	Assault	5	2.56%
Fall Victim	19	9.74%	Diabetic Problem	5	2.56%
Ingestion/Poisoning	14	7.18%	Pregnancy/Childbirth	4	2.05%
Unconscious/Fainting	13	6.67%	Unknown Problem	4	2.05%
Psychiatric Problems	12	6.15%	Abdominal Pain	3	1.54%
Seizure/Convulsions	11	5.64%	Anaphylactic Reaction	3	1.54%
Chest Pain	10	5.13%	Back Pain	3	1.54%
Breathing Problem	9	4.62%	Choking	2	1.03%
Cardiac Arrest	7	3.59%	Heart Problems	2	1.03%
Sick Person	7	3.59%	Stroke/CVA	2	1.03%
Traumatic Injury	6	3.08%	CO Poisoning/Hazmat	1	0.51%
			Heat/Cold Exposure	1	0.51%
			Overdose	1	0.51%
			Stab/Gunshot Wound	1	0.51%

Medical Statistics Report

Minutes from Dispatch to Enroute

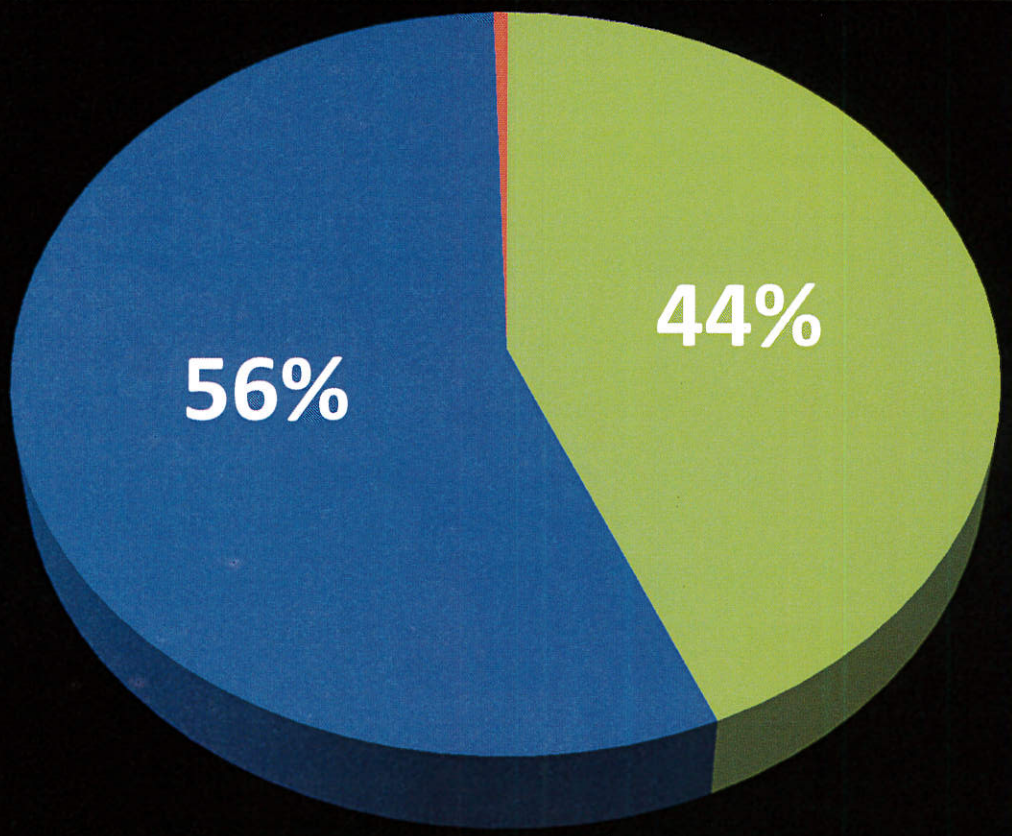

Minutes	Calls
0 - 1	85
2 - 3	109
4 - 5	1
Total	195

Medical Statistics Report

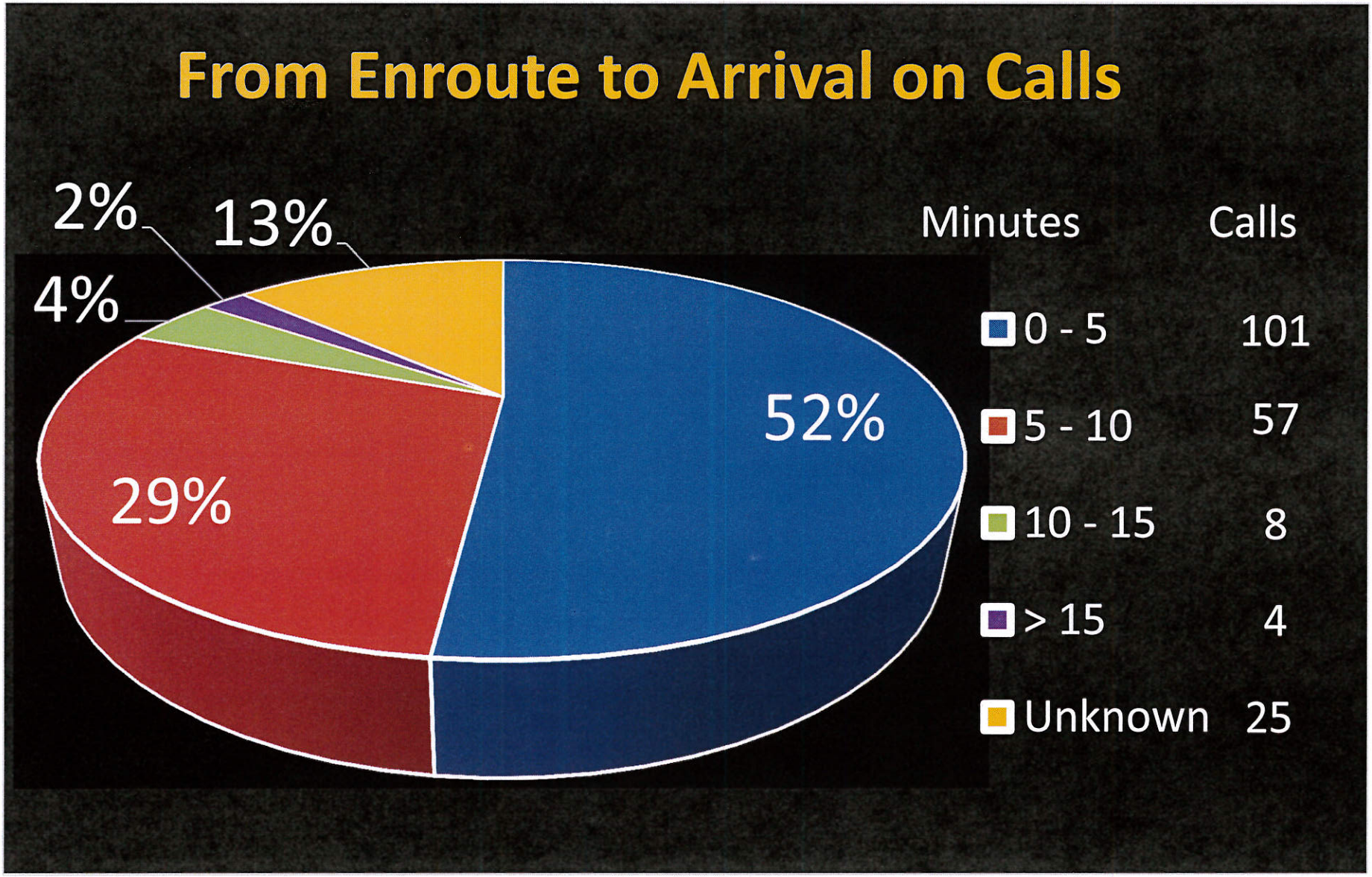

Medical Statistics Report

Average Run Times	
Enroute	0:01:35
To Scene	0:05:58
At Scene	0:16:13
To Destination	0:13:27
Back in Service	0:37:01
Total	1:14:14

Medical Statistics Report

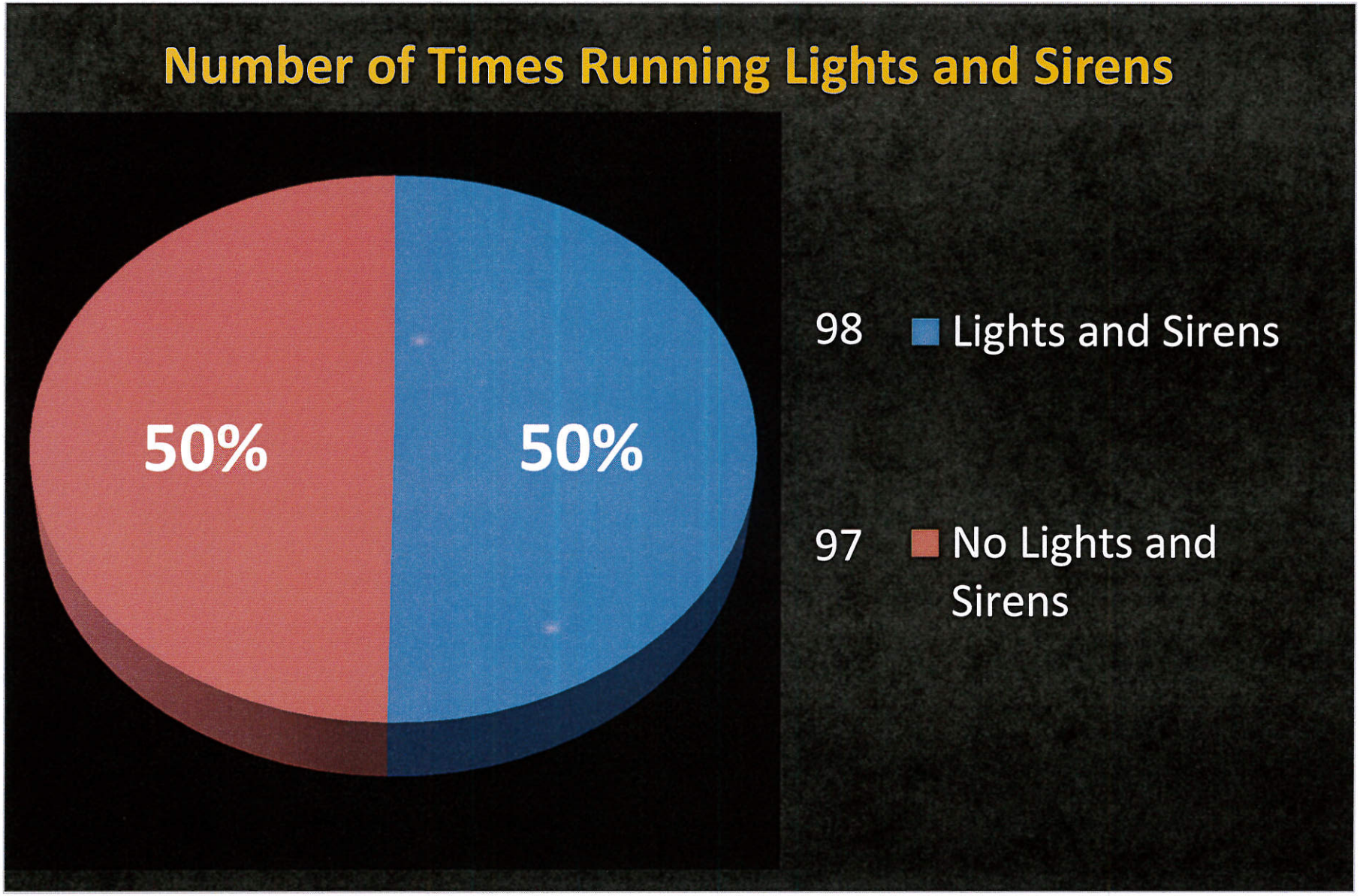

Medical Statistics Report

Number of Ambulance Transports by Hospital

Destination	# of Runs	% of Runs
Riverton IHC	47	40.87
IMC	12	10.43
Lone Peak	10	8.70
Jordan Valley	7	6.09
Primary Childrens	4	3.48
University of Utah	3	2.61
American Fork	2	1.74
South Jordan Health Center	2	1.74
St. Marks	1	0.87
Total	115	100.00

Medical Statistics Report

Patient Outcome After Receiving 911 Call

Response Disposition	# of Times	% of Times
Treated, Transported by EMS (ALS)	84	43.08%
Cancelled	37	18.97%
Treated and Released	19	9.74%
No Treatment Required	15	7.69%
Patient Refused Care	10	5.13%
No Patient Found	8	4.10%
Treated, Transported by EMS (BLS)	7	3.59%
Treated, Transferred Care	5	2.56%
Dead at Scene	4	2.05%
Agency Assist	3	1.54%
Treated, Transported by Private Vehicle	2	1.03%
Standby Only - No Patient Contacts	1	0.51%
Total	**195**	**100%**

Bluffdale Fire Department

Fire Statistics Report

61 Fire Calls

11/1/2015 – 04/30/2016

Fire Statistics Report

Type of Fire Calls Bluffdale Responded to

Situation	Total
False Alarm & False Call	19
Fire	15
Good Intent Call	14
Hazardous Condition(No fire)	7
Service Call	6
Total	61

Fire Statistics Report

Actual Fires Bluffdale Responded to

Incident Type	#
Structure Fire	11
False alarm and false call, other	9
Dispatched and cancelled enroute	9
Unintentional system/detector operation (no fire)	7
Combustible/flammable spills & leaks	3
Electrical wiring/equipment problem	3
Steam, other gas mistaken for smoke	3
Public service assistance	3
Outside rubbish fire	2
System or detector malfunction	2
Water problem	2
Chemical release, reaction, or toxic condition	1
Mobile property (vehicle) fire	1
Natural vegetation fire	1
Unauthorized burning	1
Malicious, mischievous false alarm	1
Good intent call, other	1
Total	62

Fire Statistics Report

Hazardous Incidents Bluffdale Responded to

Gasoline or other flammable liquid spill	1
Gas leak (natural gas or LPG)	2
Chemical spill or leak	1
Heat from short circuit (wiring), defective/worn	1
Power line down	2

Fire Statistics Report

Mutual Aid Calls Given/Received

Given	Incidents
Unified Fire Authority	15
Received	**Incidents**
Unified Fire Authority	10

Bluffdale Fire Department

End

Agenda Item 5

BLUFFDALE

14175 Redwood Road, Bluffdale, Utah 84065; Tel. 801-559-7781; mfazio@bluffale.com

Memo

Date: 6 July 2016

From: Michael Fazio, P.E.

To: Mark Reid, City Manager

Mayor Timothy

City Council

CC:

RE: City Standards Amendment – ST-7A and B, ST-2

The City updated the following standards for the reasons shown below:

1. Typical Cross-Section Part 1 and 2 – The City Standards were modified to reflect the new APWA (American Public Works Association) requirements. The APWA Hot Mix Asphalt standard was recently updated triggering the need to change the City standard. The RAP (Reclaimed Asphalt Pavement) was also changed from 10% to 15% to reflect industry minimum standards. These changes may enhance the pavement quality.

2. Electrical Street Lighting Standards – The distance in between and the location of street lights have been clarified and changed to specific distances and locations according to street type:
    a. ***Arterials Roads - No greater than 175 feet apart along each side and at every intersection.***
    b. ***Collector Road – No greater than 250 feet apart and at every intersection.***
    c. ***Residential Roads – No greater than 250 feet apart staggered on each side of the road, and at every intersection.***
    d. ***Crosswalks – One light pole at each end of the crosswalk to clearly show people in the crosswalk.***

I recommend approving these amendments to the City standards.

CITY OF BLUFFDALE, UTAH

ORDINANCE NO. 2016-___

AN ORDINANCE AMENDING THE CITY STANDARDS AND SPECIFICATIONS.

WHEREAS the City Engineer has prepared standard drawings and specifications to be used as a guide to development and the construction of infrastructure throughout the City;

WHEREAS the City has previously adopted City Standards and Specifications as provided by Ordinance No. 2-23-99-1, as amended ("Standards");

WHEREAS drawings, in particular, are required to provide a quick reference to concise and relevant information;

WHEREAS specifications are required to provide detailed information regarding construction materials, testing, procedures, and methods of construction; and

WHEREAS the City Council desires to amend the existing Standards as follows:

NOW, THEREFORE, BE IT ORDAINED BY THE BLUFFDALE CITY COUNCIL AS FOLLOWS:

Section 1. **Adoption of Revised Standards.** The City Council hereby adopts the Engineering Standards as contained in Exhibit A.

Section 2. **Repealer.** Any prior Standards inconsistent with the attached Standards are hereby amended. All other existing Standards, details, and specifications are not hereby amended and remain in full force and effect.

Section 3. **Severability.** If any part or provision of this Ordinance is held invalid or unenforceable, such invalidity or unenforceability shall not affect any other portion of this Ordinance and all provisions, clauses and words of this Ordinance shall be severable.

Section 4. **Effective Date**. This ordinance shall take effect immediately after recording in the Office of the City Recorder.

PASSED AND DATED: July 13, 2016.

_____
Mayor

Attest:

_____
Recorder

Voting by the City Council:	Aye	Nay
Councilmember Jackson	___	___
Councilmember Nielsen	___	___
Councilmember Preece	___	___
Councilmember Westwood	___	___
Councilmember Wingate	___	___

EXHIBIT A

ENGINEERING STANDARDS

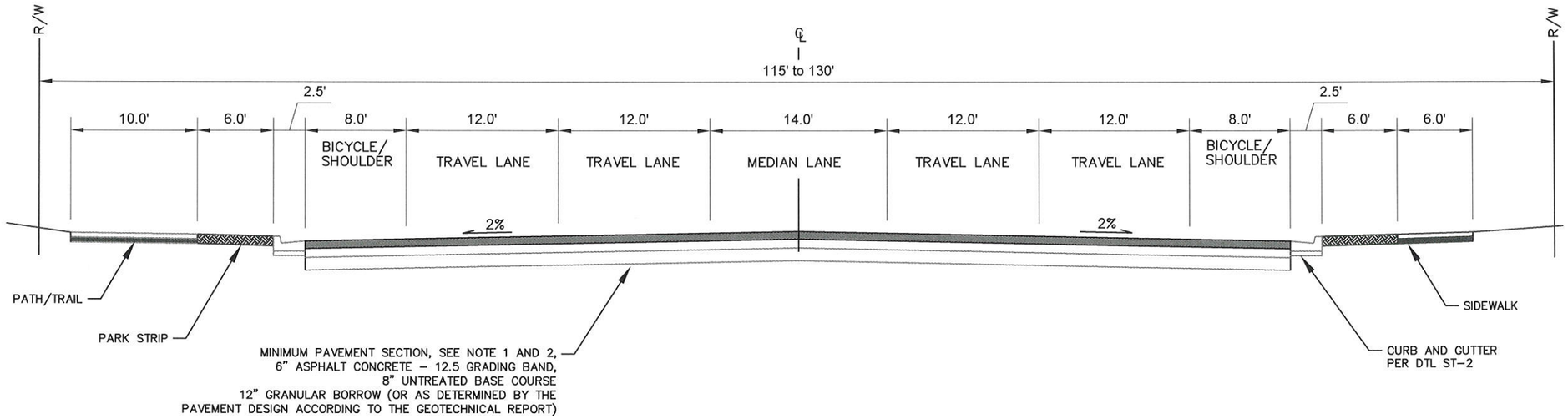

MAJOR ARTERIAL

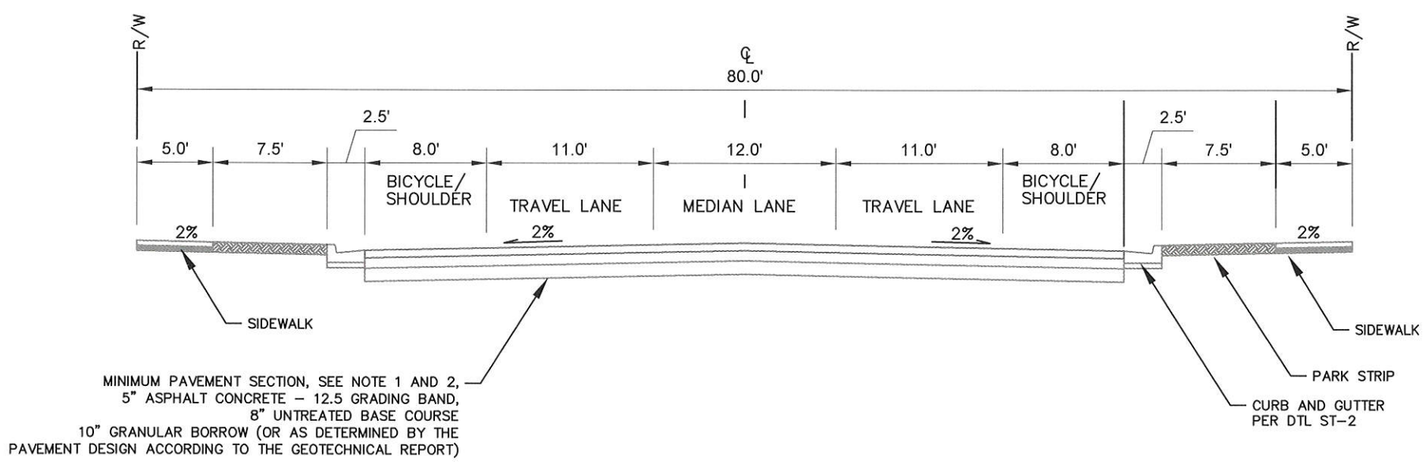

MAJOR COLLECTOR

NOTES:

1.ASPHALT CONCRETE: USE SUPERPAVE HMA IN ACCORDANCE WITH APWA 32 12 06.05 WITH THE FOLLOWING:
- A. USE SP–1/2, PG64–28 BINDER, 75Nd UNLESS OTHERWISE SPECIFIED.
- B. DO NOT INCORPORATE MORE THAN 15% RAP
- C. C. MEET MINIMUM VMA OF 14.5% FOR SP–1/2 AND 13.5% FOR SP–3/4 GRADATIONS.

2. INSTALL ASPHALT CONCRETE IN ACCORDANCE WITH APWA 32 12 16

3. PROVIDE THAT THE ROAD DRAINS PROPERLY AND IS FREE OF ANY STANDING WATER ON ANY PORTION OF THE PAVEMENT.

4. PROVIDE LANDSCAPING IN PARK STRIP IN ACCORDANCE WITH CITY ORDINANCES.

5. SEAL NEW PAVEMENT WITH A SAND SLURRY AFTER ONE YEAR OF PAVEMENT PLACEMENT.

6. THE CITY ENGINEER MAY APPROVE SPECIFIC DESIGNS WHEN VARIATIONS FROM THE STANDARDS ARE NEEDED DUE TO SITE CONDITIONS, UTILITY, OR TOPOGRAPHICAL CONSTRAINTS. ANY VARIANT OF THESE DETAILS MUST BE BASED UPON A DESIGN STAMPED BY A UTAH LICENSED PROFESSIONAL CIVIL ENGINEER.

BLUFFDALE EST. 1848	City of Bluffdale Engineering Standards Approved Michael Fogo 7/12/16 City Engineer Date	STANDARD DETAIL TITLE TYPICAL STREET CROSS-SECTION PART 1	DETAIL SERIES: STREETS DETAIL NO. ST-7A

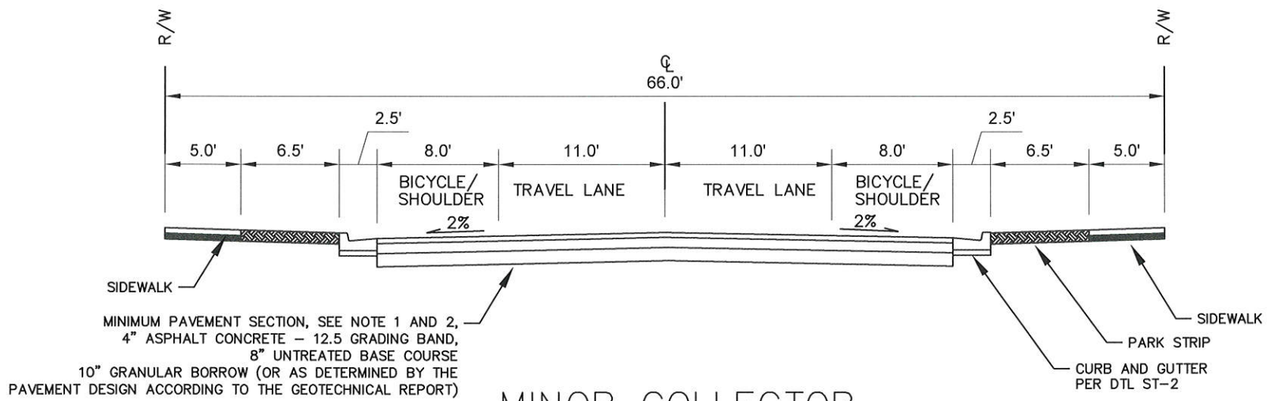

MINOR COLLECTOR

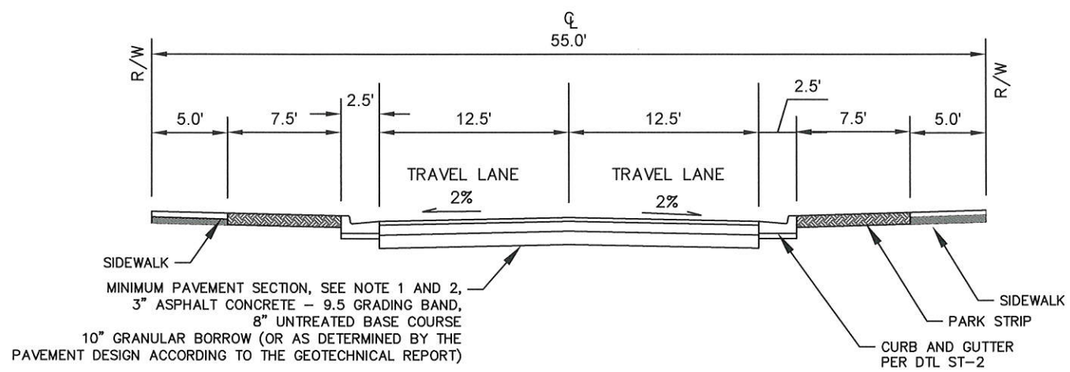

STANDARD RESIDENTIAL A

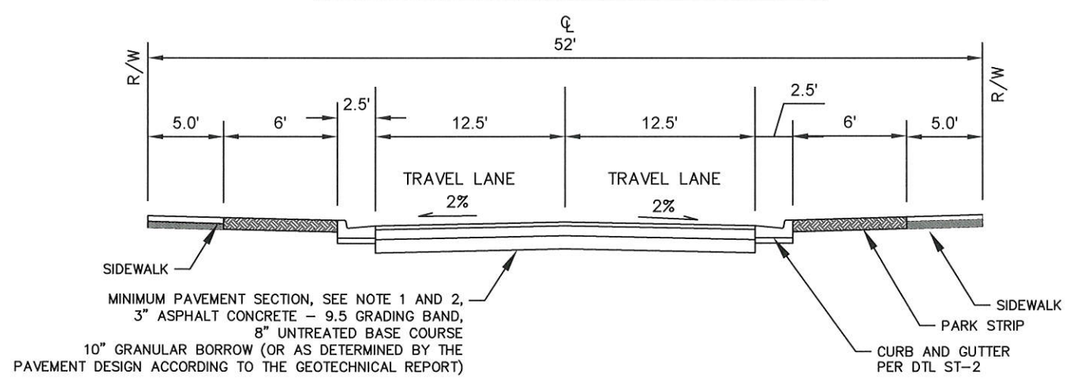

STANDARD RESIDENTIAL B–ONLY ALLOWED IN ZONE R–1–43

NOTES:

1.ASPHALT CONCRETE: USE SUPERPAVE HMA IN ACCORDANCE WITH APWA 32 12 06.05 WITH THE FOLLOWING:
- A. USE SP–1/2, PG64–28 BINDER, 75Nd UNLESS OTHERWISE SPECIFIED.
- B. DO NOT INCORPORATE MORE THAN 15% RAP
- C. C. MEET MINIMUM VMA OF 14.5% FOR SP–1/2 AND 13.5% FOR SP–3/4 GRADATIONS.

2. INSTALL ASPHALT CONCRETE IN ACCORDANCE WITH APWA 32 12 16

3. PROVIDE THAT THE ROAD DRAINS PROPERLY AND IS FREE OF ANY STANDING WATER ON ANY PORTION OF THE PAVEMENT.

4. PROVIDE LANDSCAPING IN PARK STRIP IN ACCORDANCE WITH CITY ORDINANCES.

5. SEAL NEW PAVEMENT WITH A SAND SLURRY AFTER ONE YEAR OF PAVEMENT PLACEMENT.

6. USE RESIDENTIAL ASPHALT CONCRETE CRITERIA (SEE CROSS–SECTION) FOR PATHWAYS, SIDEWALKS AND PARKING LOTS.

7. THE CITY ENGINEER MAY APPROVE SPECIFIC DESIGNS WHEN VARIATIONS FROM THE STANDARDS ARE NEEDED DUE TO SITE CONDITIONS, UTILITY, OR TOPOGRAPHICAL CONSTRAINTS. ANY VARIANT OF THESE DETAILS MUST BE BASED UPON A DESIGN STAMPED BY A UTAH LICENSED PROFESSIONAL CIVIL ENGINEER.

BLUFFDALE EST. 1848	City of Bluffdale Engineering Standards Approved Michael Fogg 7/11/16 City Engineer Date	STANDARD DETAIL TITLE TYPICAL STREET CROSS-SECTIONS PART 2	DETAIL SERIES: STREETS DETAIL NO. ST-7B

ELECTRICAL STREET LIGHTING STANDARD

I GENERAL

The General Conditions, Supplementary General Conditions, Alternates and Addenda, applicable drawings and the Technical Specifications herein shall apply to the providing and construction of a complete street lighting system.

II RELATED WORK AND REFERENCED SECTIONS

A. APWA
1. DOCUMENT 00 72 00 - General Conditions
2. SECTION - 01 33 00 Submittal Procedure
3. DIVISION 3 - Concrete
4. DIVISION 26 - Electrical
5. SECTION - 31 23 16 Excavation

A. UDOT
B. IESNA
C. AASHTO

III CODES, STANDARDS, PERMITS, AND LICENSES

A. DESIGN STANDARD - Use Illuminating Engineers Society of North America (IESNA) RP-8-00 for the design of street and area lighting. Luminance, illuminance, uniformity and visibility levels are according to the roadway classification and pedestrian conflict areas. Provide spacing requirements for lighting systems that meet the IESNA RP-8-00 standards.
1. Provide full cut-off fixtures with zero uplight.
2. Alternate light pole spacing along both sides of the street in zig-zag configuration for arterial street lighting systems.
3. Single sided lighting for residential streets is allowed.
4. Provide maximum circuit lengths based on 20 amp lighting branch circuit protection from the distribution, voltage drop calculations following the recommended voltage drop values in the NEC, and a minimum conductor size of #6 AWG.
5. Conduit crossing the streets are allowed only at intersections.
6. Final discretion of the acceptance of street lighting belongs to the Engineer.

B. CODES AND STANDARDS - All work, labor, and equipment shall conform to applicable State and Local Codes and Standards and the applicable sections of the latest revisions of the following:
1. City of Bluffdale Standard Drawings and Specifications
2. IESNA RP-8-00
3. American Society for Testing and Materials (ASTM)
4. National Fire Protection Association, National Electrical Code (NEC)
5. Insulated Power Cable Engineers Association (IPCEA)
6. Underwriters Laboratories Inc. (UL)
7. National Electrical Manufacturer's Association (NEMA)
8. American National Standards Institute (ANSI)
9. Institute of Electrical and Electronic Engineers (IEEE)
10. International Building Code (IBC)
11. Uniform Fire Code (UFC)
12. Occupational Safety and Health Administration (OSHA)

Conflicts between any of the above referenced codes and standards and between any of them and these Specifications and/or the Project Drawings shall be resolved by complying with the more stringent requirements.

C. PERMITS AND LICENSES - Secure all permits and licenses required in connection with this work. Obtain the required permits for connection to the utilities.

IV SUBMITTALS

A. Submit all shop drawings, circuitry, schematics, maps, and all other needed documents to the City for approval.

B. Prior to installing a street light system, submit a street lighting plan to City for approval. Use the following formatting:
1. Provide a plat map showing the location of transformers, points of disconnect, conduit routing, street light locations and the wattage of each light.
2. Scale the drawings at 1"= 30' and print them on 11x17 paper.
3. Provide Iso-candle diagrams showing the illuminance values projected by the street lights at the design locations, heights, and spacing.
4. Use the following color code:
   a. Yellow: Street Lights
   b. Green: Transformers
   c. Red: Conduit Routing
   d. Black: Base Mapping
   e. Blue: Points of Disconnect and Lighting Controllers
5. ***Submit any changes/variation from the standards to the City Engineer for approval.***

V POST CONSTRUCTION DOCUMENTATION

A. Assemble and deliver to the Owner post construction documentation. Failure to do so shall be cause of withholding final payment. Deliver to the Owner documentation containing as follows:

B. Thirty (30) days prior to power connection and after all utility requirements have been met, submit as constructed lighting plans to the Owner. Owner will coordinate with utility for connection to power. Submit as a pdf print with an accompanying AutoCAD DWG file. Use the following formatting:
1. Provide "as constructed" mapping showing the location of transformers, points of disconnect, conduit routing, street light locations and the wattage of each light.
2. Scale the drawings at 1"= 30' and print them on 11x17 paper.
3. Use the color code from IV SUMBITTALS.B.4 above.

C. Provide Manufacturer's specifications and recommendations regarding operations and maintenance for each power source, lighting controller, lighting pole, and fixture. Deliver original documentation and electronic copy.

D. Submit to the owner prior to project acceptance, the manufacturer's warranty for each item with a manufacturer's warranty including items required by the contract documents to have a manufacturer's warranty. Deliver original documentation and electronic copy.

E. OTHER INFORMATION - Provide any other information required by the Engineer.

VI PRODUCTS

A. Provide equipment and materials as specified, new, of the best quality and free from defects. Each type of equipment or material shall be the same make and quality.

B. UNDERWRITERS LABORATORIES: Provide all equipment, materials, and devices listed by Underwriters Laboratories, Inc. (UL) for their intended use. Provide custom designed items that are fabricated using UL listed materials. Provide custom panels that bear the UL label certifying UL-508 standards.

C. APPROVAL OF SUBSTITUTIONS: Equipment substitutions are allowed. Request and obtain written approval from the Engineer for any substitutions in this regard at least seven (7) calendar days prior to bidding. Submit complete data, including detailed specifications and drawings with written request in duplicate. Samples may be requested if deemed necessary. Include certificates of compliance with specifications or a list of all exceptions to the specifications with the request.

D. STORAGE OF EQUIPMENT AND MATERIALS
1. Protect equipment and materials during transportation, unloading, storage, and holding of all electrical systems, materials, and equipment until they are installed in the Work, and accepted by the Owner. This shall include responsibility for damage, loss, theft, and pilferage.
2. Handle and store materials and equipment in accordance with the manufacturer's and/or supplier's instructions. Store packaged items in original, undamaged condition with manufacturer's seals and labels intact. Store materials and equipment in a neat and orderly condition at all times and allow for easy access for inspection.

E. LIGHT POLES: See the standard drawings for acceptable light poles. The City reserves the right to install other than the standard pole at the discretion of the Engineer.

F.LUMINAIRES: See the standard drawings for acceptable luminaires. The City reserves the right to install other than the standard luminaire at the discretion of the Engineer.

G. POLE BASES: See the standard drawings for acceptable pole bases and foundations. The City reserves the right to install other than the standard pole base or foundation at the discretion of the Engineer.

VII CONSTRUCTION REQUIREMENTS

- Obtain appropriate permits before work begins including permits from other utilities.

A. CONDUIT - Route lighting conduits within Bluffdale City Right of Way or UDOT Right of Way.
1. Install PVC conduit to street light poles. HDPE is allowed when installed by directional boring.
2. Install RMC (rigid metal conduit) in concrete foundations, as risers into junction boxes and disconnects, or where conduit is exposed. Wrap RMC conduit with approved protective tape when direct buried or encased in concrete.
3. Provide detectable caution tape 12" above buried conduit runs.
4. Install conduit runs parallel or at right angles to lines of structures, roadways, sidewalks, right of way boundaries, etc.
5. Clean and swab the inside of conduits, by mechanical means, to remove foreign materials and moisture before conductors are installed.
6. Proof each conduit with a proper sized mandrel.
7. Refer to the NEC for minimum cover depths for buried conduits.
8. For conduits installed within UDOT right of ways follow UDOT requirements.
9. Install conduits under curbs, gutters, sidewalks, concrete flatwork and decorative surfaces by boring, jacking, or drilling. Replace any damaged concrete sections joint to joint at no additional cost to owners.

B. JUNCTION BOXES - Install junction boxes in Bluffdale City or UDOT Right of Way
1. Do not install junction boxes within the traveled roadway or shoulders.
2. Install a junction box at the base of each light pole.
3. Install the fuses in the junction box.
4. Level the top of junction box flush with the surrounding grade. When installing in concrete sidewalk, remove entire section of concrete, joint to joint and replace with in-kind materials to match the existing grade, texture, and color of the existing surface.
5. Junction boxes that settle lower than the surrounding ground level or junction boxes that heave above the surrounding ground level are not acceptable. Re-grade and re-compact junction boxes that are not at the surrounding ground level.

C. CONDUCTORS - Install all power cables and wires in strict accordance with the manufacturers' instructions, and in conformance with current trade practices and the NEC.
1. Install a minimum conductor size of #6.
2. Provide copper conductor with type RHW OR THHN insulation rated for 600 volts.
3. Splicing shall be permitted as directed in the project plans or with Engineers approval, and shall be held to an absolute minimum.
4. Splice in junction boxes or similar accessible locations.
5. Install waterproof splices or waterproofing to splices and ensure the waterproof integrity of the splice.
6. Replace damaged conductors.

D. CIRCUIT CONFIGURATIONS
1. For lighting circuits in residential areas, configure the light poles in succession along the circuit.
2. For lighting circuits along arterial roads, configure the light poles in alternate circuits so that each pole is on a separate circuit from the adjacent poles.
3. When receptacles are installed on lighting poles, provide and install separate 120 volt circuits to the receptacles.
4. Provide and install separate fusing for the receptacle in the lighting junction box.

E. BONDING/GROUNDING SYSTEM WIRE
1. Bond the lighting system per the NEC.
2. Replaced at no additional cost to owner, grounding conductors with damage to conductor material, insulation, or protective coating.
3. Provide and install clamp type grounding lugs made of high conductivity copper alloy, listed for the use, for all equipment to be grounded.

F. LIGHTING ELECTRICAL SERVICE
1. Provide and install metering and service equipment as indicated on the Drawings, as directed by the Power Company and as required by these Specifications.
2. Install free standing service equipment on concrete embedded posts and ensure posts and equipment are plumb in all directions.
3. Ground the service system per NEC requirements (ground wire tied to the rebar of the footings and driven ground rods, etc.)

G. LIGHT POLES
1. See the Standard Detail.
2. Spacing:
   a. ***Arterials Roads - No greater than 175 feet apart along each side and at every intersection.***
   b. ***Collector Road - No greater than 250 feet apart and at every intersection.***
   c. ***Residential Roads - No greater than 250 feet apart staggered on each side of the road, and at every intersection.***
   d. ***Crosswalks - One light pole at each end of the crosswalk to clearly show people in the crosswalk.***
3. Place a minimum of two light poles at each intersection with a crosswalk.

H. LUMINAIRE
1. See the Standard Details.

I. POLE BASES
1. See the Standard Details.

J. REPAIRS - The CONTRACTOR is responsible for all damage caused by construction activities.
1. Provide repairs to existing sidewalks, roadways, landscaping, and all other facilities caused by construction activities. Make the repair to bring the damaged facility back to pre-construction condition.
2. If a conflict of pre-construction condition exists, bring the repair to the highest requirement unless it can be resolved by pre-construction documentation.

VIII FINAL INSPECTION AND ACCEPTANCE

Notify the Engineer when work is considered to be complete, in full operating condition, and ready for final inspection. The Engineer, after determining that the installation is ready for final inspection, shall conduct the final inspection and tests as are deemed necessary to determine that the provisions of the specifications are satisfied. The Owner will not accept work nor make final payment to CONTRACTOR until Engineer has certified that the work of CONTRACTOR is complete and in conformance with the specifications and guarantees.

Agenda Item 6

BLUFFDALE

14175 Redwood Road, Bluffdale, Utah 84065; Tel. 801-559-7781; mfazio@bluffale.com

Memo

Date: 6 July 2016

From: Michael Fazio, P.E.

To: Mark Reid, City Manager
Mayor Timothy
City Council

CC:

RE: Parks and Recreation Landscape Standards

The City didn't have any standards for building park infrastructures (irrigations, plantings, trails etc.) Bio-West, a consultant, prepared the new standards. The new standards include:

- Irrigation Standard Detail Drawings
- Planting Standard Detail Drawings
- Park Amenities Detail Drawings
- Planting Irrigation Specifications
- Turf Grass Specifications
- Planting Specifications
- Guidelines for Outdoors Recreation Area Restrooms.

These standards will ensure that all park improvements in the City parks and ROW (right of way) be uniform and consistent at review, approval and construction providing clear direction to contractors and developers on what to furnish and how to install in the City Parks and ROW park strips or other vegetated infrastructure.

The City staff has reviewed the proposed standards and all comments have been incorporated.

I recommend approving these standards.

CITY OF BLUFFDALE, UTAH

ORDINANCE NO. 2016-___

AN ORDINANCE AMENDING THE CITY STANDARDS AND SPECIFICATIONS, ADOPTING PARKS AND RECREATION LANDSCAPE STANDARDS.

WHEREAS the City Engineer has prepared standard drawings and specifications to be used as a guide to development and the construction of infrastructure throughout the City;

WHEREAS the City has previously adopted City Standards and Specifications as provided by Ordinance No. 2-23-99-1, as amended ("Standards");

WHEREAS drawings, in particular, are required to provide a quick reference to concise and relevant information;

WHEREAS specifications are required to provide detailed information regarding construction materials, testing, procedures, and methods of construction; and

WHEREAS the City Council desires to amend the existing Standards as follows:

NOW, THEREFORE, BE IT ORDAINED BY THE BLUFFDALE CITY COUNCIL AS FOLLOWS:

Section 1. **Adoption of Revised Standards.** The City Council hereby adopts the Parks and Recreation Landscape Standards as part of the City Standards and Specifications, as contained in Exhibit A.

Section 2. **Repealer.** Any prior Standards inconsistent with the attached Standards are hereby amended. All other existing Standards, details, and specifications are not hereby amended and remain in full force and effect.

Section 3. **Severability.** If any part or provision of this Ordinance is held invalid or unenforceable, such invalidity or unenforceability shall not affect any other portion of this Ordinance and all provisions, clauses and words of this Ordinance shall be severable.

Section 4. **Effective Date**. This ordinance shall take effect immediately after recording in the Office of the City Recorder.

PASSED AND DATED: July 13, 2016.

_____

Attest: Mayor

_____

Recorder

Voting by the City Council:	Aye	Nay
Councilmember Jackson	___	___
Councilmember Nielsen	___	___
Councilmember Preece	___	___
Councilmember Westwood	___	___
Councilmember Wingate	___	___

EXHIBIT A

ENGINEERING STANDARDS

BLUFFDALE

EST. 1848

PARKS AND RECREATION LANDSCAPE STANDARDS

July 2016

Index to Standard Drawings, Specifications, and Guidelines

Irrigation Standard Detail Drawings

01 Backflow Preventer
02 Irrigation Controller
03 Isolation Gate Valve
04 Irrigation Pipe Trench
05 Irrigation Pipe Thrust Blocks
06 Irrigaiton Pipe Sleeve
07 Quick Coupler
08 Remote Control Valve
09 Manual Drain Valve
10 Pop-Up Spray Sprinkler
11 Pop-Up Gear Drive Rotor

Planting Standard Detail Drawings

01 Tree Planting
02 Tree Planting On Slope
03 Shrub Planting
04 Shrub Planting On Slope
05 Tree Protection

Park Amenities Detail Drawings

01 Park Signage - Granite
02 Park Signage - Wood
03 Trail - Local
04 Trail - Equestrian
05 Playground Safety Surfacing

Planting Irrigation Specifications

32 84 00 - Planting Irrigation

Turf Grass Specifications

32 92 00 - Turf Grass

Planting Specifications

32 93 00 - Plants

Guidelines for Outdoor Recreation Areas Restrooms

Guidelines for Park Amenities

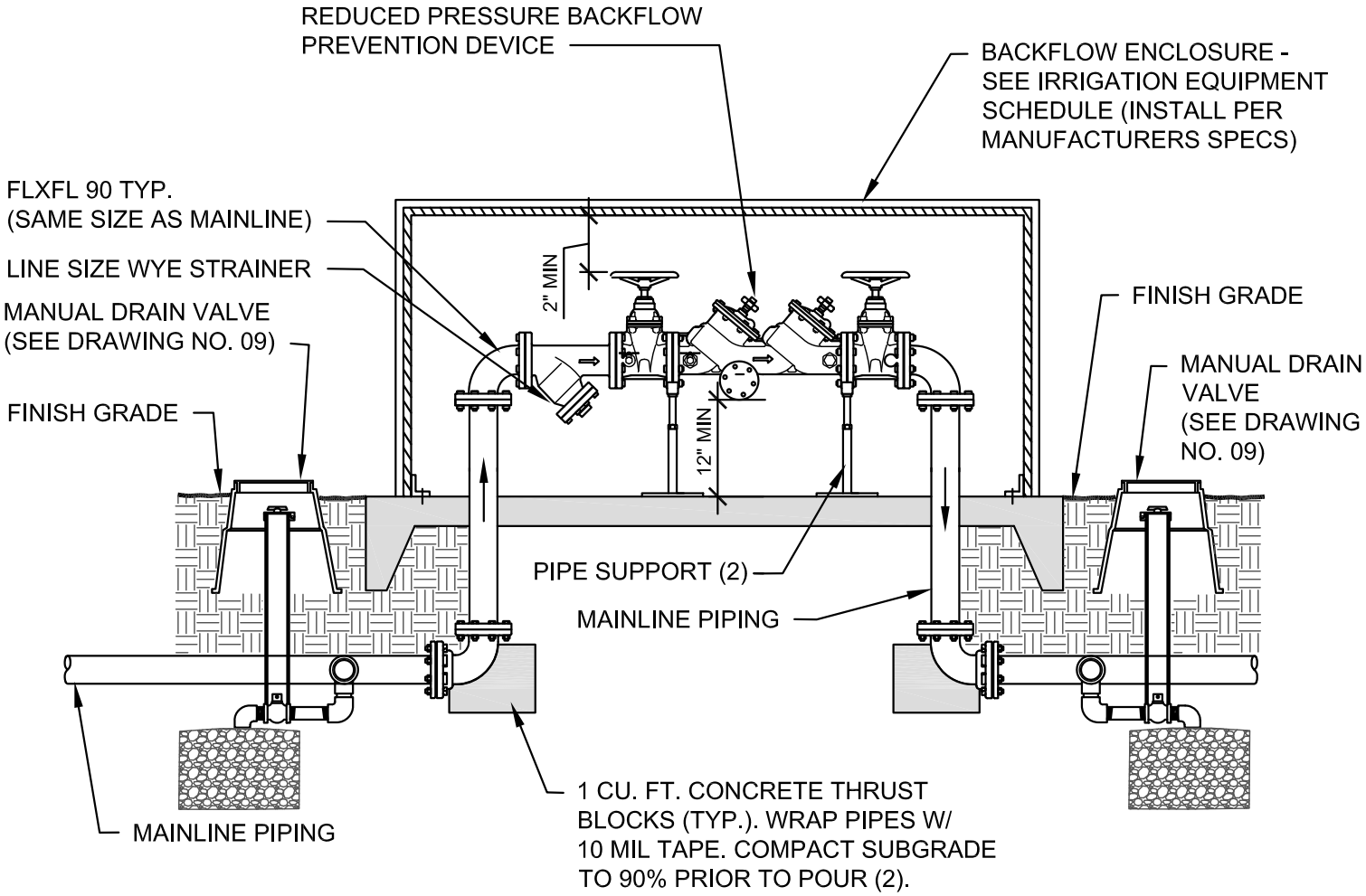

NOTES:
1. INSTALL BACKFLOW PREVENTER PER MANUFACTURERS SPECIFICATIONS.
2. ALL BURIED BOLTS SHALL BE STAINLESS STEEL.
3. ALL BACKFLOW PREVENTERS ARE TO MEET CURRENT JURISDICTIONAL CODES.
4. INSTALL BACKFLOW PREVENTER IN SHRUB BEDS WHERE POSSIBLE.
5. PROVIDE WINTERIZATION OF THE MAINLINE BACKFLOW AS REQUIRED WITH THE MANUAL DRAIN FOR COMPRESSED AIR.

BACKFLOW PREVENTER

NOT TO SCALE

Irrigation Details
Backflow Preventer

Drawing No. 01
Rev. No. 0

BLUFFDALE

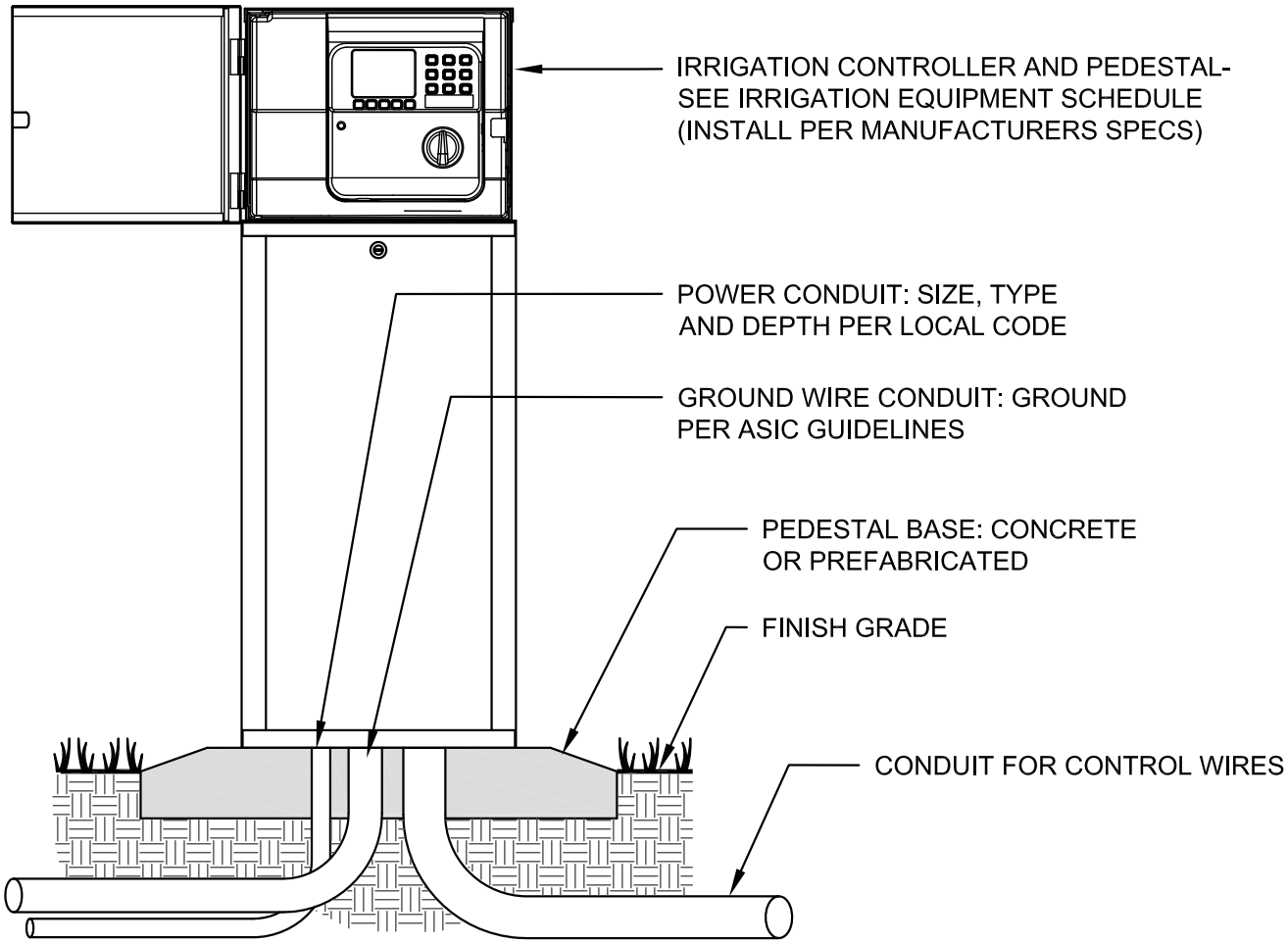

CONTROLLER WITH METAL PEDESTAL

IRRIGATION CONTROLLER

NOT TO SCALE

Irrigation Details
Irrigation Controller

Drawing No. 02
Rev. No. 0

BLUFFDALE

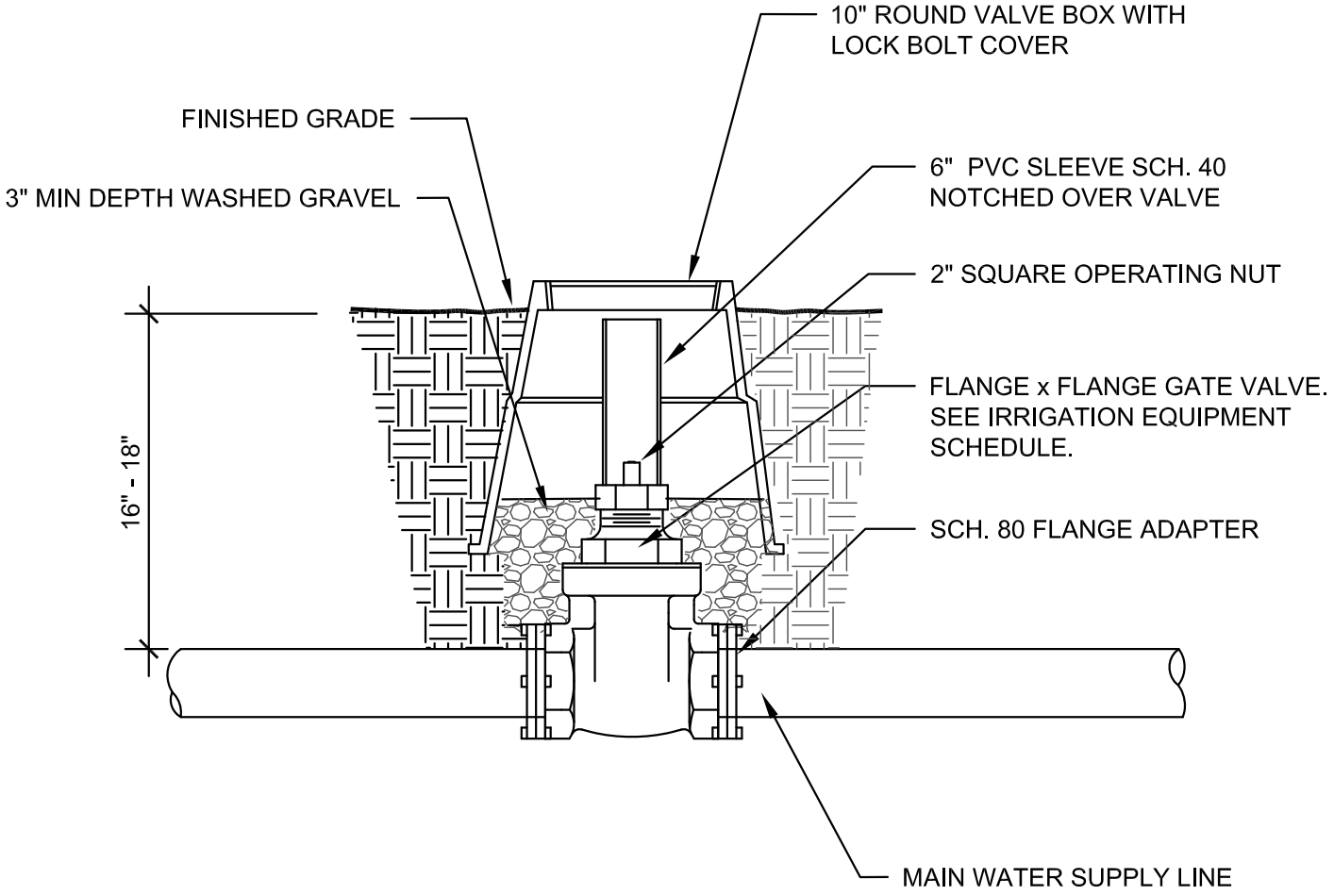

ISOLATION GATE VALVE

NOT TO SCALE

Irrigation Details
Isolation Gate Valve

Drawing No. 03
Rev. No. 0

BLUFFDALE

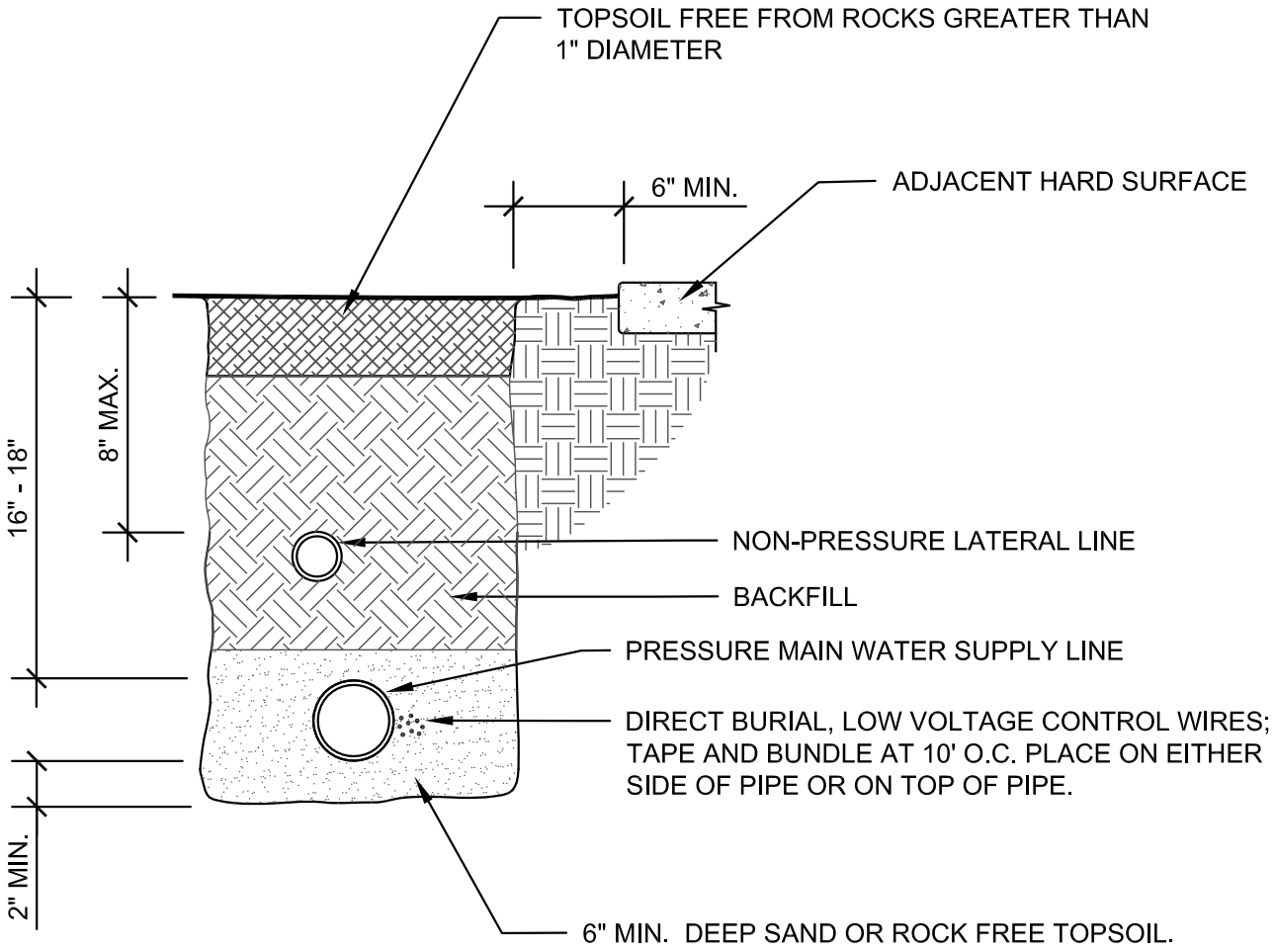

IRRIGATION PIPE TRENCH

NOT TO SCALE

Irrigation Details
Irrigation Pipe Trench

Drawing No. 04
Rev. No. 0

BLUFFDALE

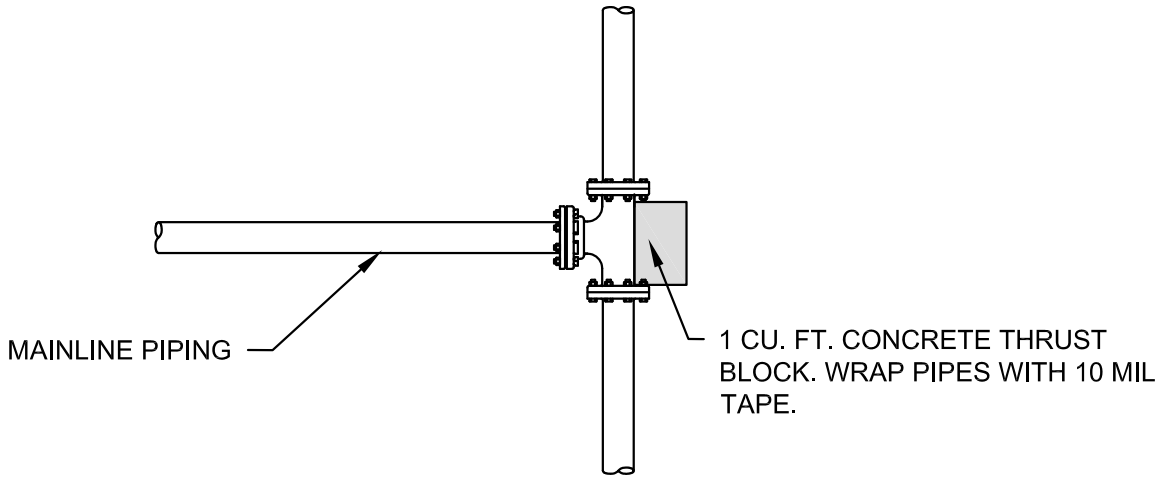

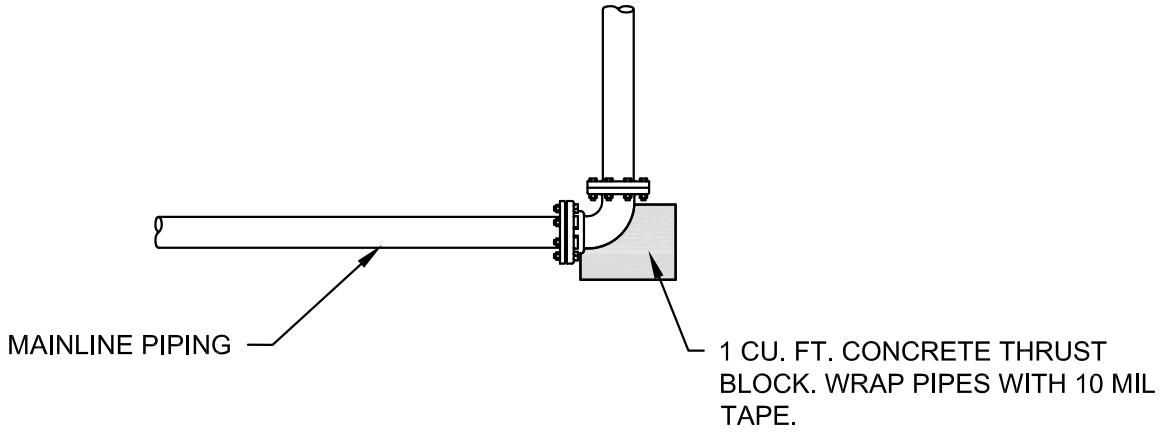

PLAN VIEW

NOTES:
1. INSTALL THRUST BLOCKS ON ALL 3" AND LARGER PRESSURIZED IRRIGATION MAIN LINE PIPE.
2. DO NOT ENCASE CONTROL WIRES IN CONCRETE.
3. CONSTRUCT THRUST BLOCKS SO THAT JOINTS AND BOLTS ARE ACCESSIBLE FOR REPAIRS.

IRRIGATION PIPE THRUST BLOCKS

NOT TO SCALE

Irrigation Details
Irrigation Pipe Thrust Blocks

Drawing No. 05
Rev. No. 0

BLUFFDALE

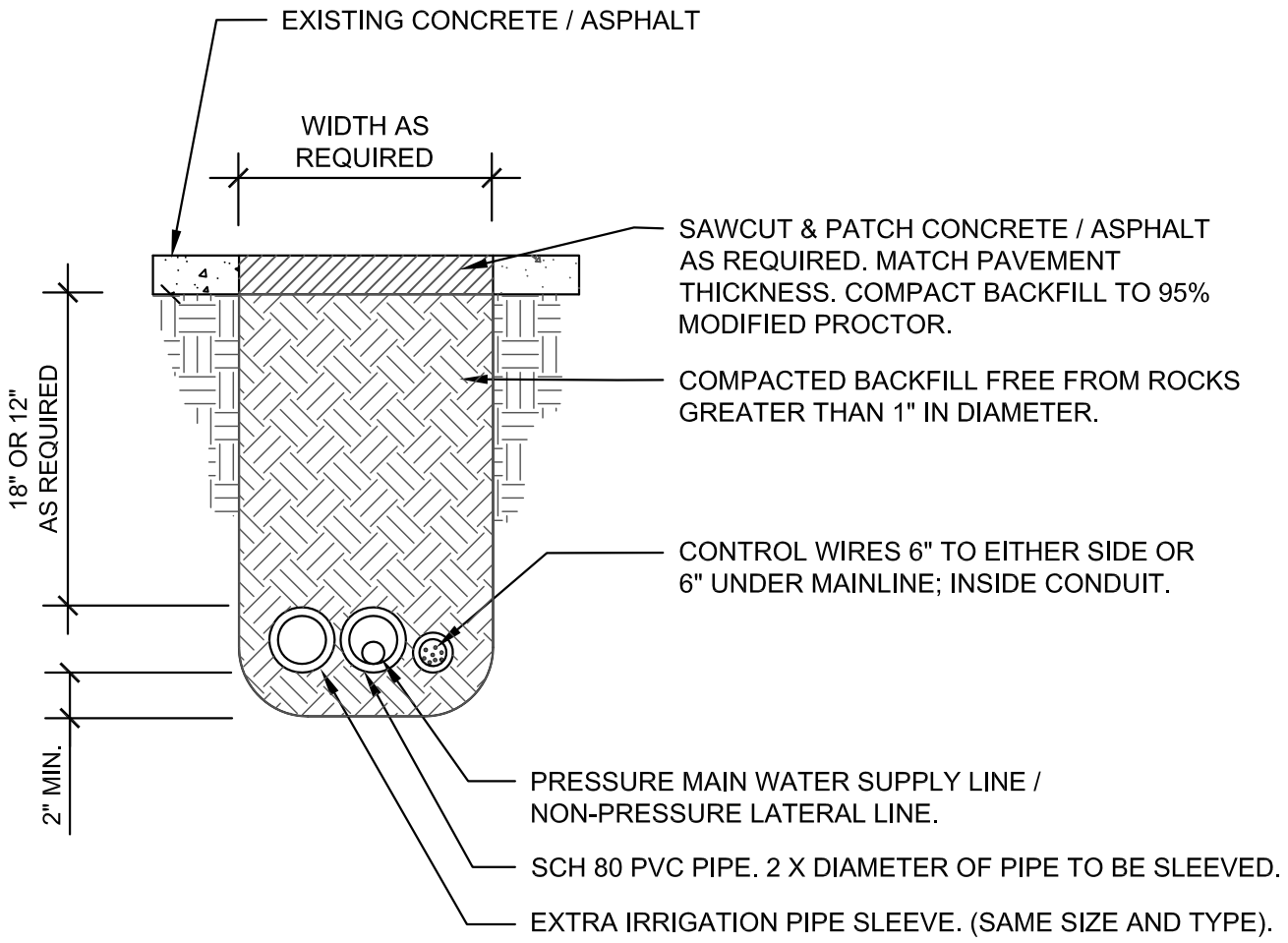

IRRIGATION PIPE SLEEVE

NOT TO SCALE

Irrigation Details
Irrigation Pipe Sleeve

Drawing No. 06
Rev. No. 0

BLUFFDALE

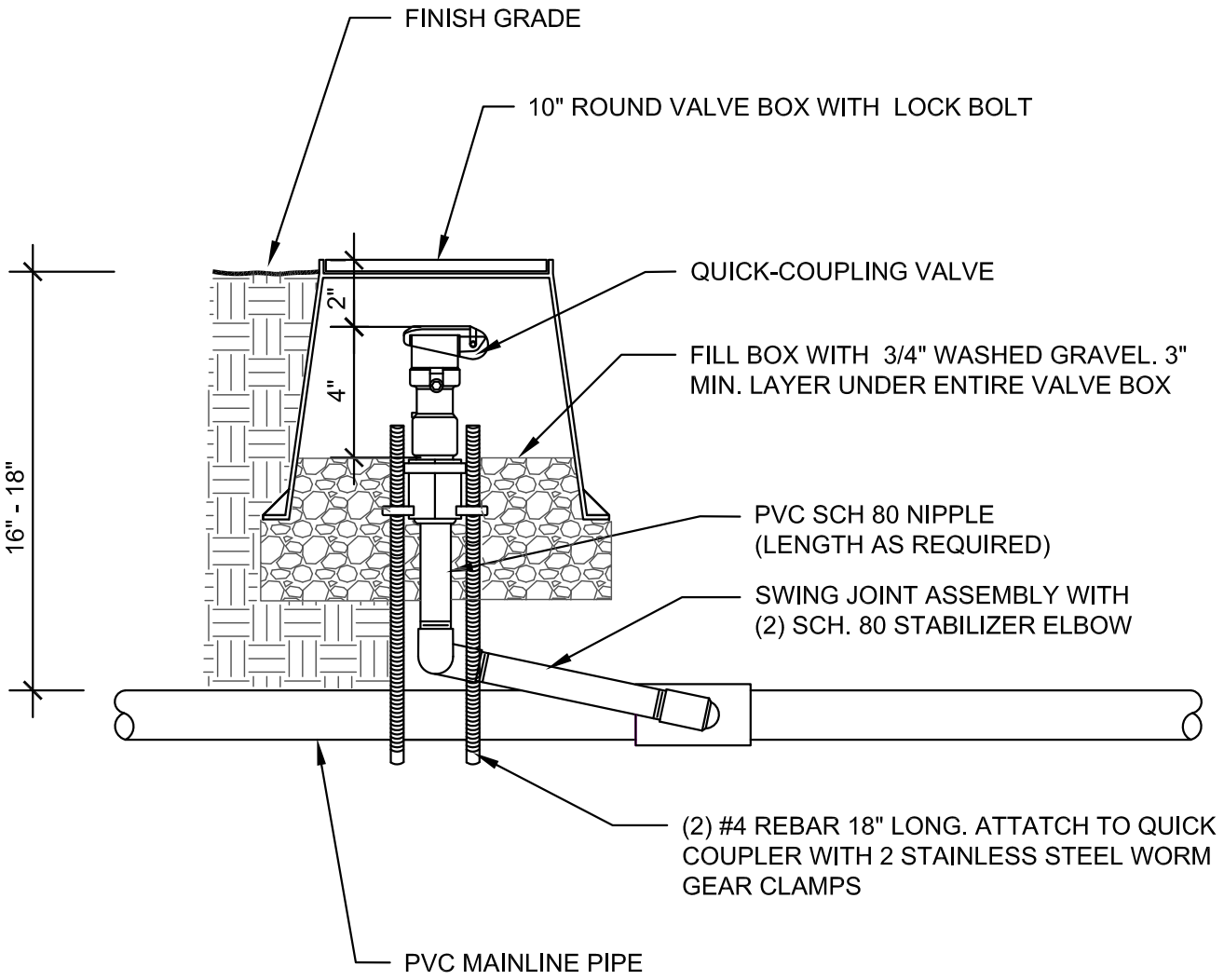

NOTES:
1) INSTALL ONE QUICK COUPLER AT EACH VALVE MANIFOLD CLUSTER GREATER THAN 100 FEET APART.
2) INSTALL ONE QUICK COUPLER IMMEDIATELY DOWN LINE OF THE BACKFLOW PREVENTION DEVICE FOR WINTERIZATION PURPOSES.

QUICK COUPLER
NOT TO SCALE

Irrigation Details
Quick Coupler

Drawing No. 07
Rev. No. 0

BLUFFDALE

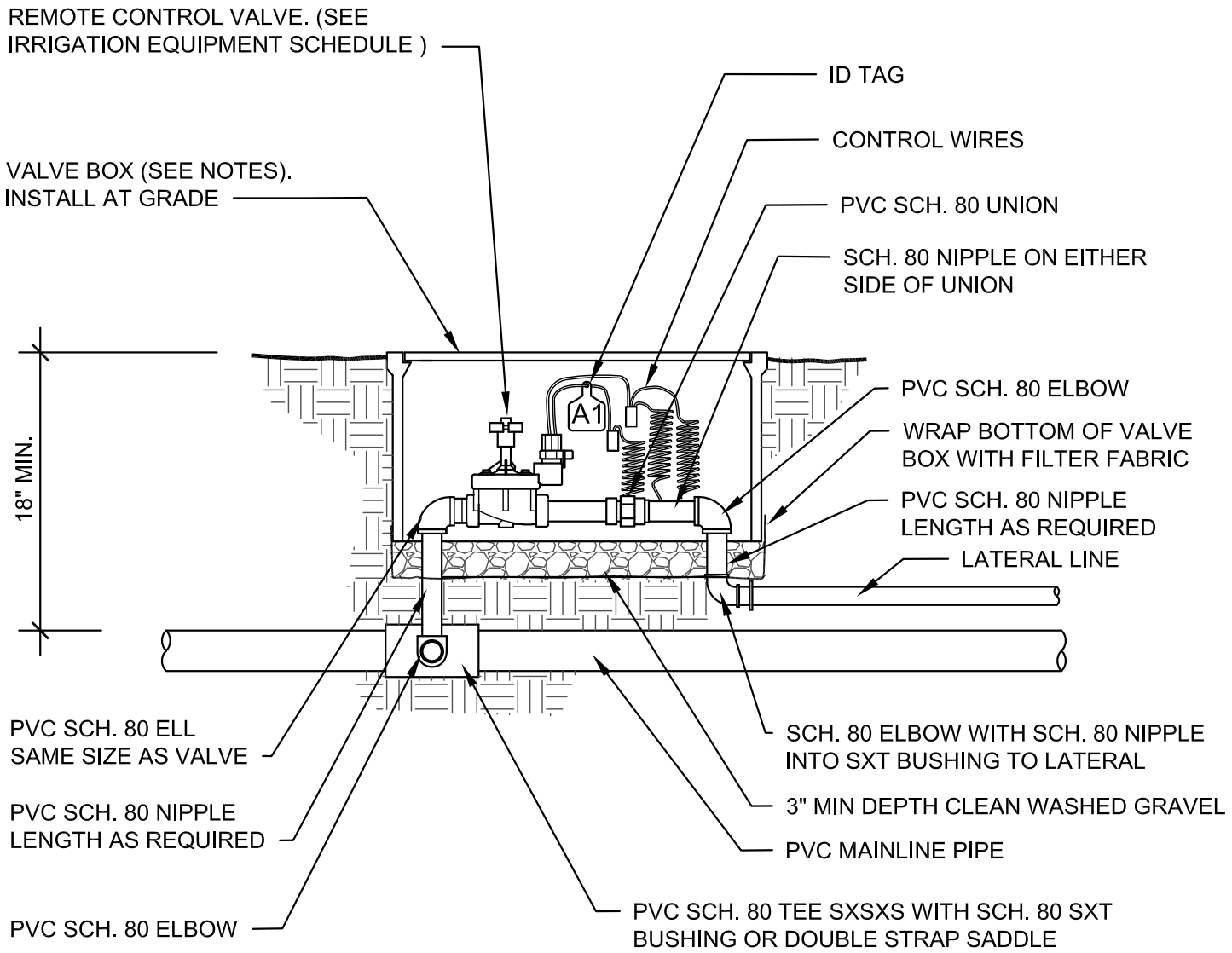

NOTES:

1) USE A STANDARD VALVE BOX FOR EACH REMOTE CONTROL VALVE SIZE $1\frac{1}{2}$" TO 2".
2) USE A JUMBO VALVE BOX FOR EACH REMOTE CONTROL VALVE SIZE LARGER THAN 2".
3) FOR 1" AND SMALLER REMOTE CONTROL VALVES, INSTALL A MAXIMUM OF TWO VALVES PER STANDARD VALVE BOX OR A MAXIMUM OF THREE VALVES PER JUMBO VALVE BOX.

REMOTE CONTROL VALVE

NOT TO SCALE

Irrigation Details
Remote Control Valve

Drawing No. 08
Rev. No. 0

BLUFFDALE

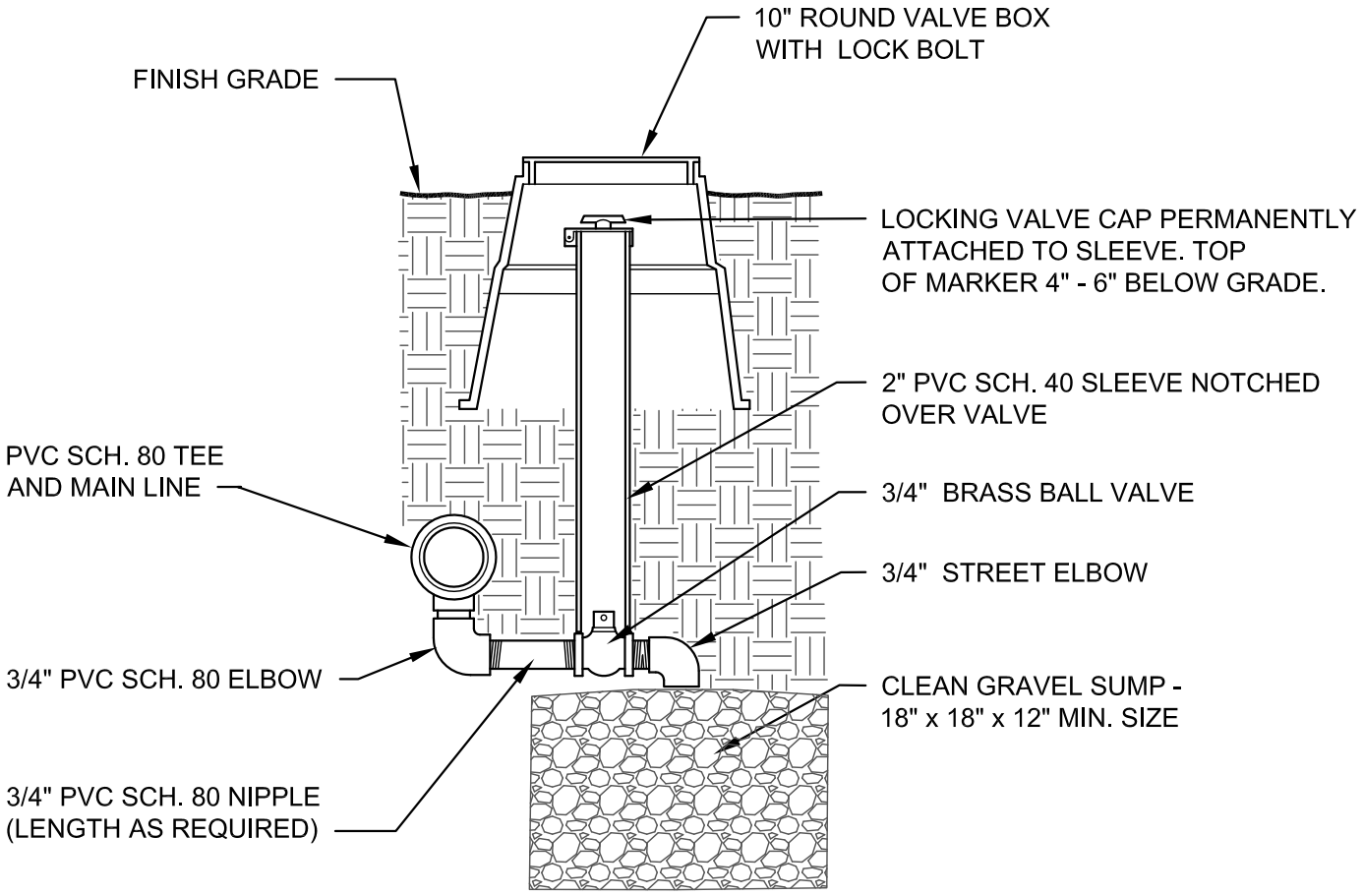

NOTES:
1. ALL PVC NIPPLES TO BE SCH. 80.
2. PROVIDE VALVE KEY TO OWNER.

MANUAL DRAIN VALVE

NOT TO SCALE

Irrigation Details
Manual Drain Valve

Drawing No. 09
Rev. No. 0

BLUFFDALE

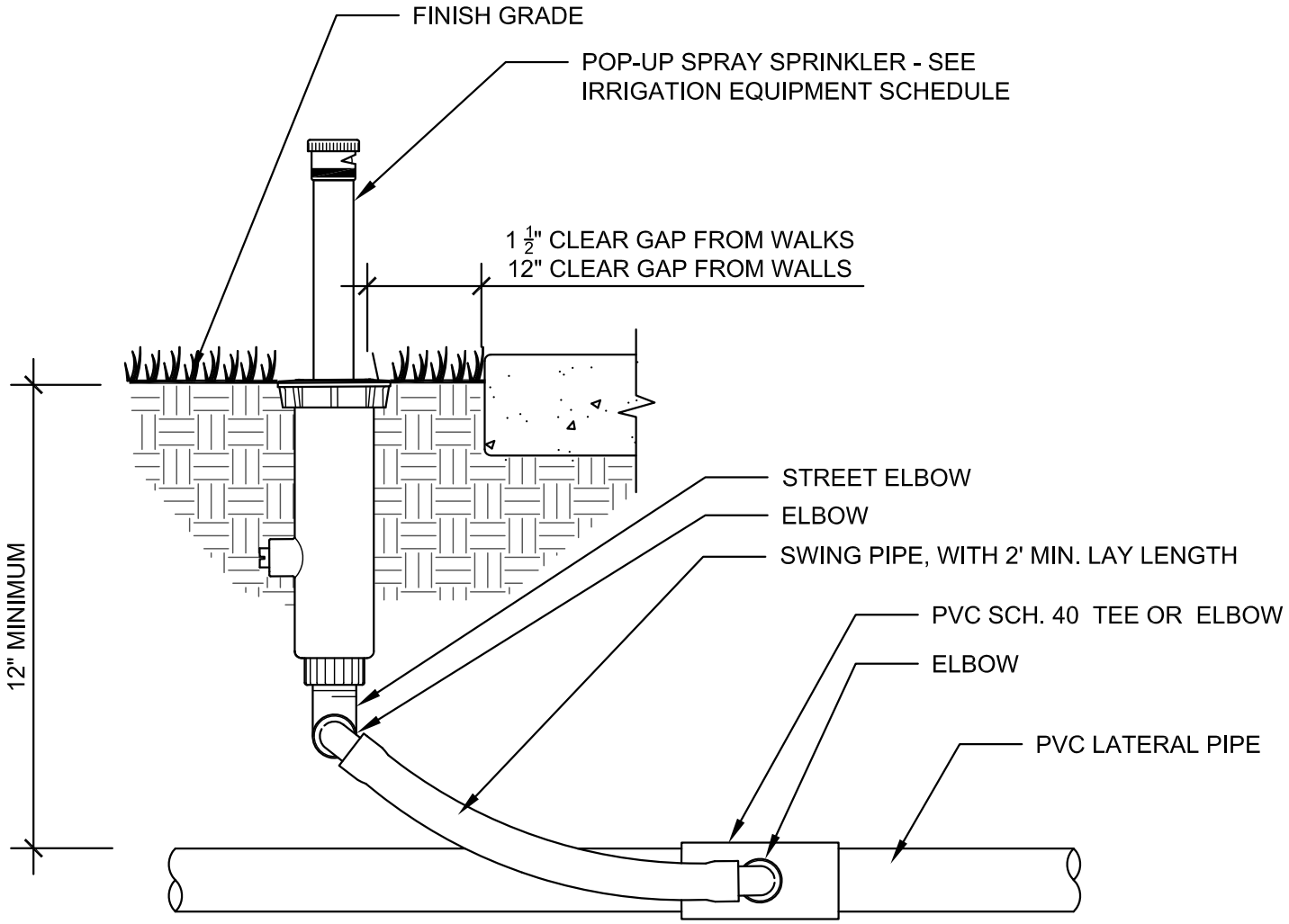

POP-UP SPRAY SPRINKLER

NOT TO SCALE

Irrigation Details
Popup Spray Sprinkler

Drawing No. 10
Rev. No. 0

BLUFFDALE

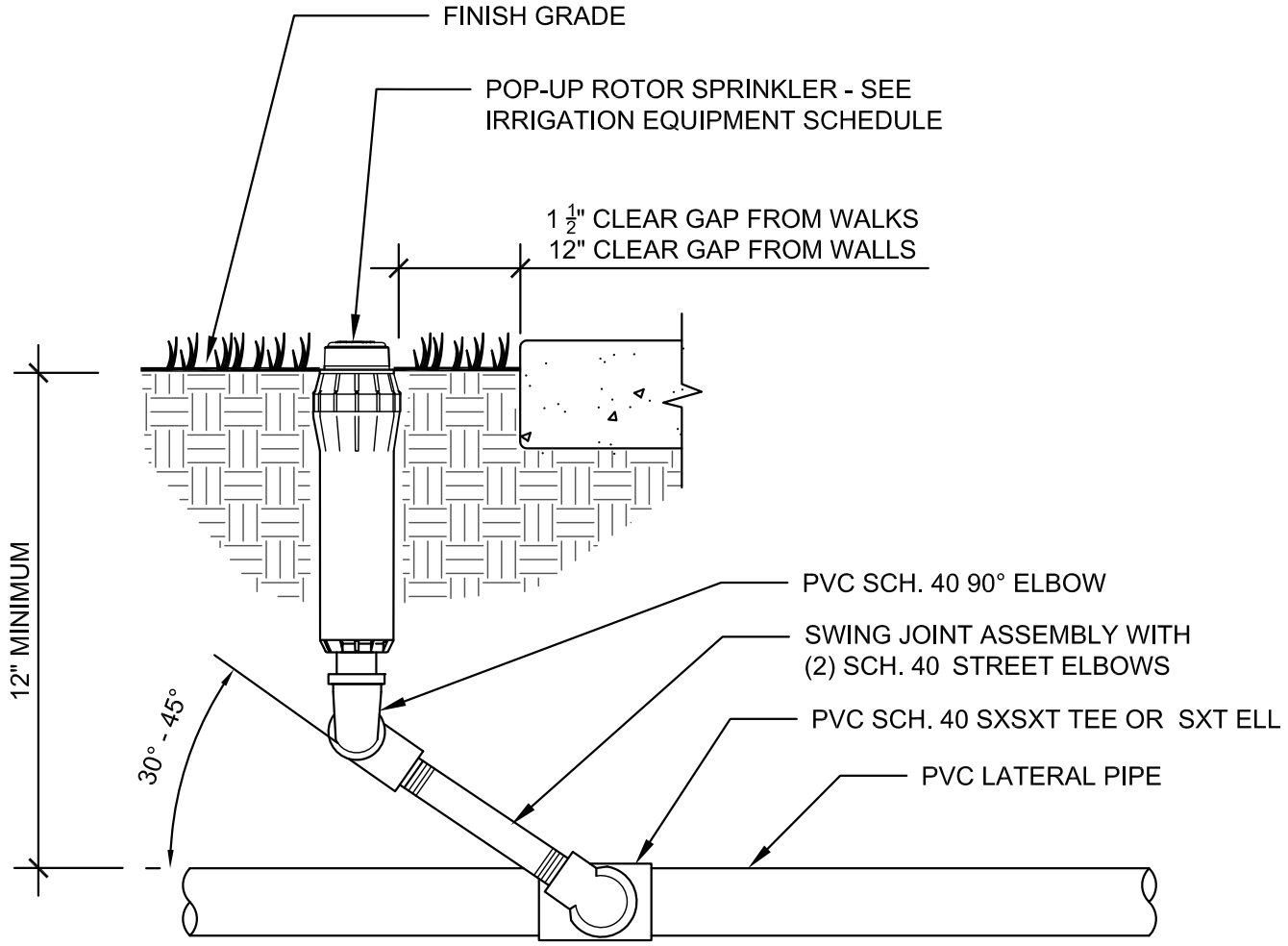

POP-UP GEAR DRIVE ROTOR

NOT TO SCALE

Irrigation Details
Popup Rotor Sprinkler

Drawing No. 11
Rev. No. 0

BLUFFDALE

NOTES:
1. ALL TREES MUST BE INSTALLED AND MAINTAINED AT TRUE VERTICAL.
2. BLUFFDALE CITY MAY NOT REQUIRE TREE STAKING UNDER CERTAIN CIRCUMSTANCES.

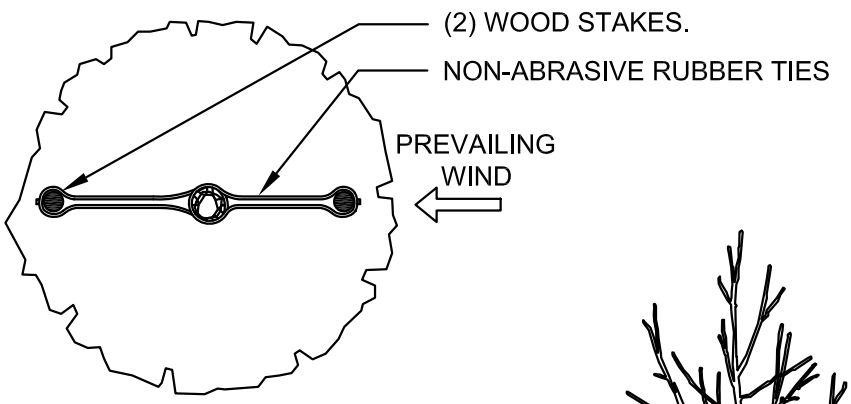

PLAN VIEW

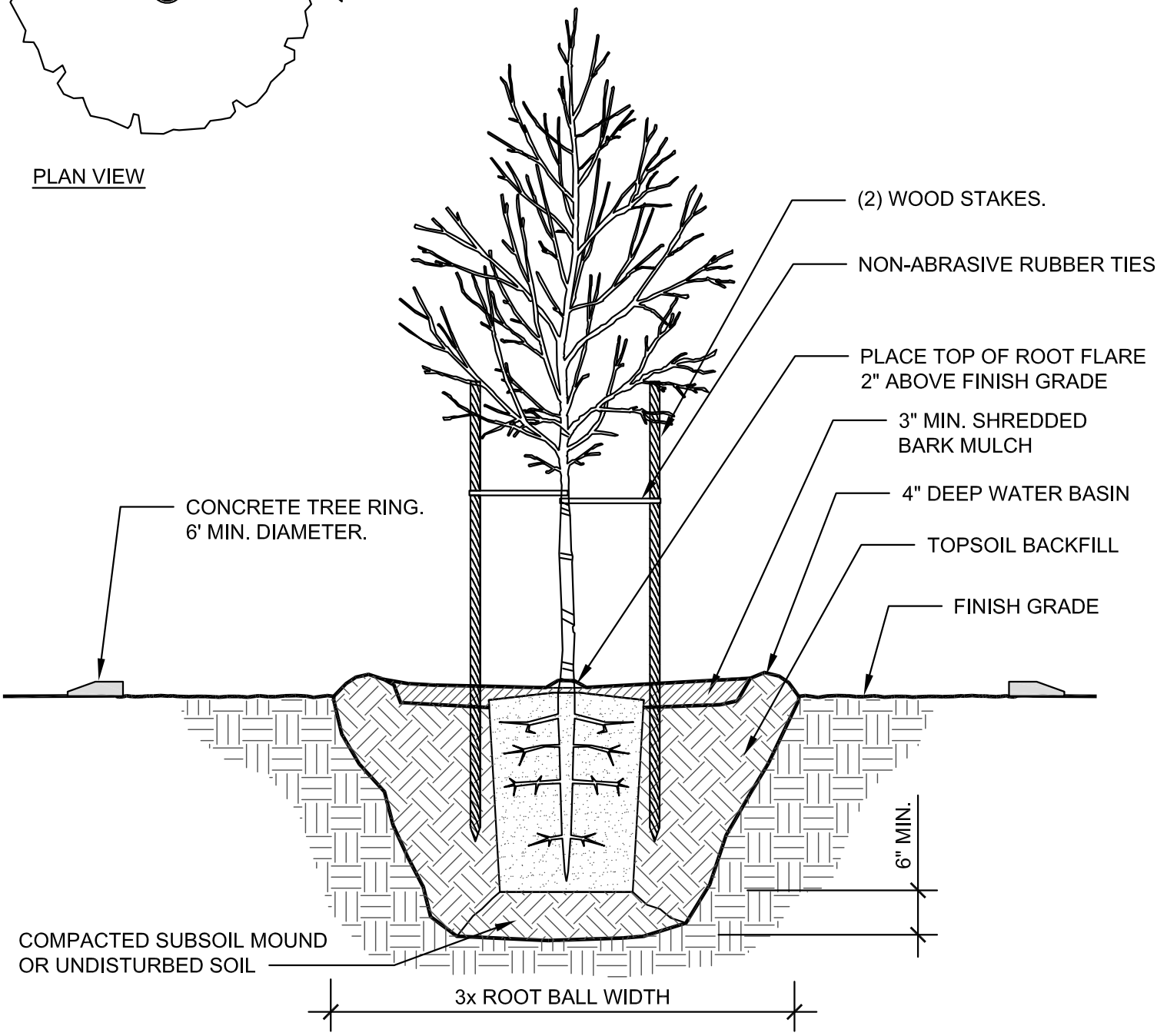

TREE PLANTING
NOT TO SCALE

Planting Details
Tree Planting

Drawing No. 01
Rev. No. 0

BLUFFDALE

NOTES:
1. ALL TREES MUST BE INSTALLED AND MAINTAINED AT TRUE VERTICAL.
2. BLUFFDALE CITY MAY NOT REQUIRE TREE STAKING UNDER CERTAIN CIRCUMSTANCES.

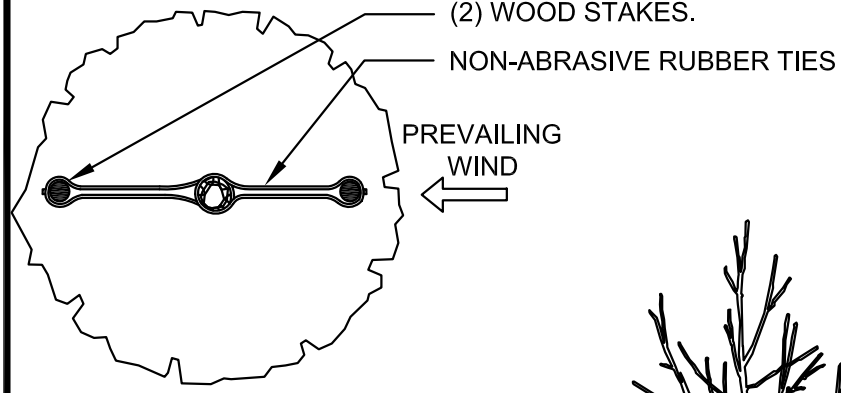

PLAN VIEW

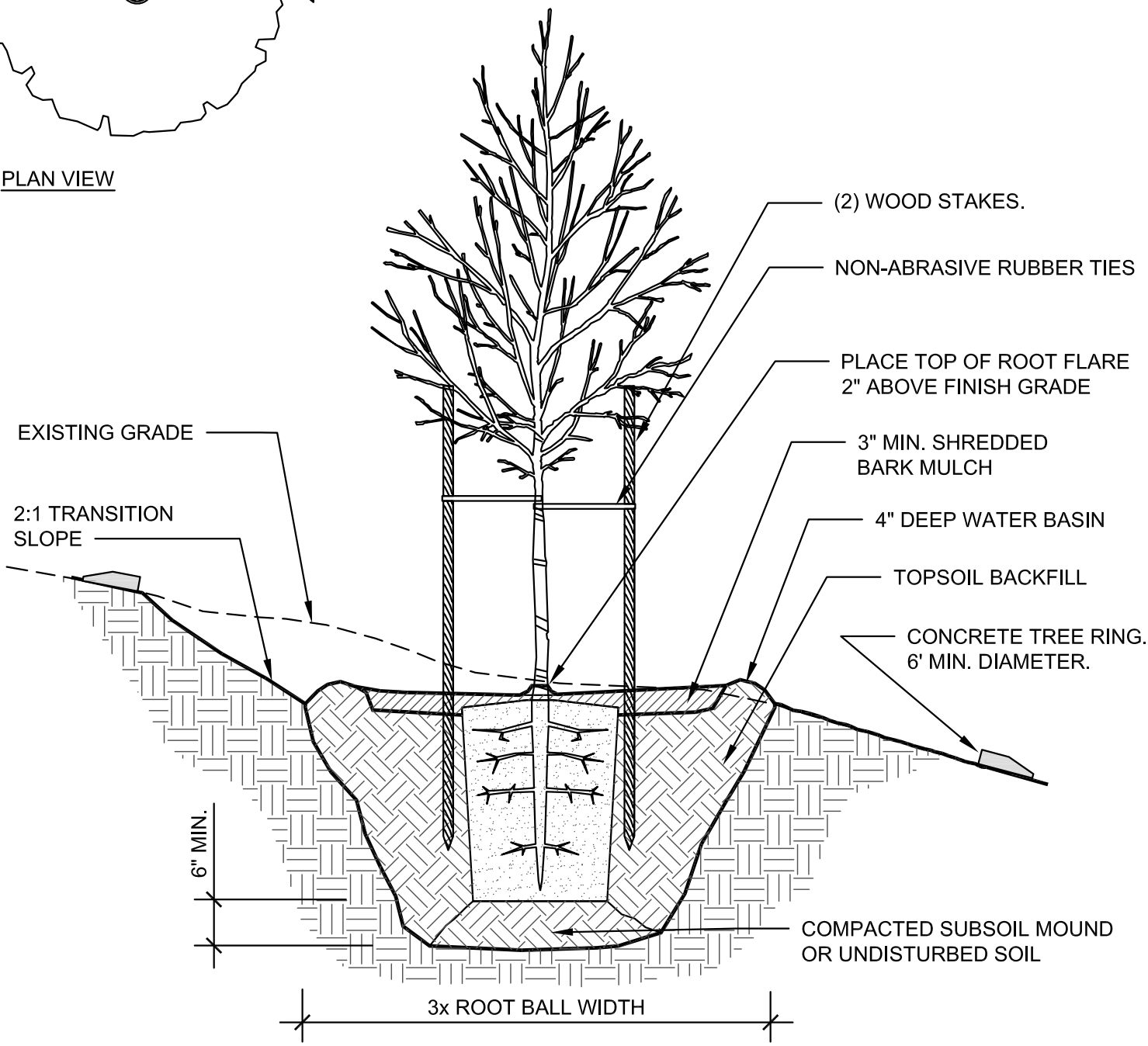

TREE PLANTING ON SLOPE

NOT TO SCALE

Planting Details
Tree Planting on Slope

Drawing No. 02
Rev. No. 0

BLUFFDALE

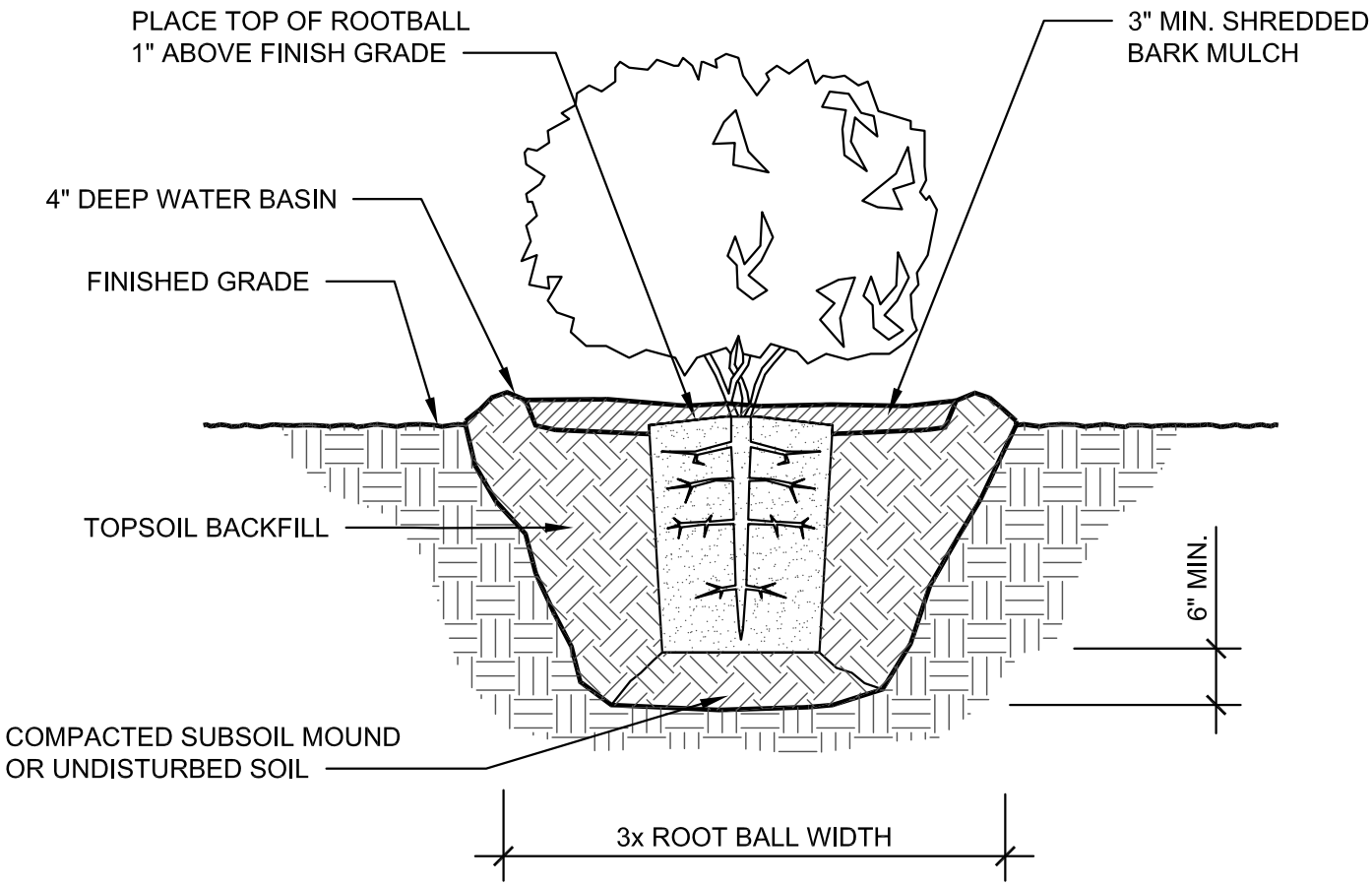

SHRUB PLANTING

NOT TO SCALE

Planting Details
Shrub Planting

Drawing No. 03
Rev. No. 0

BLUFFDALE

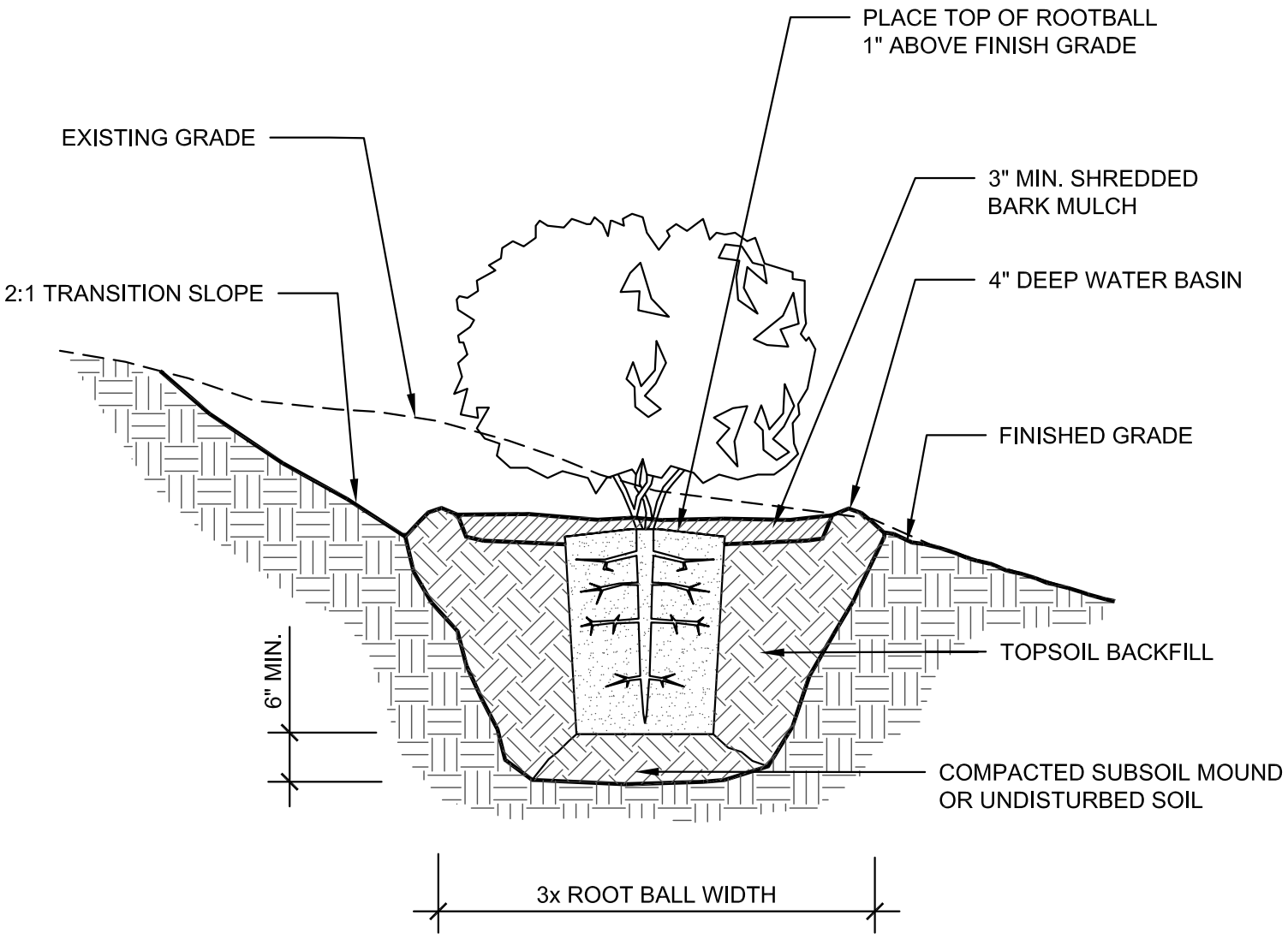

SHRUB PLANTING ON SLOPE

NOT TO SCALE

Planting Details
Shrub Planting on Slope

Drawing No. 04
Rev. No. 0

BLUFFDALE

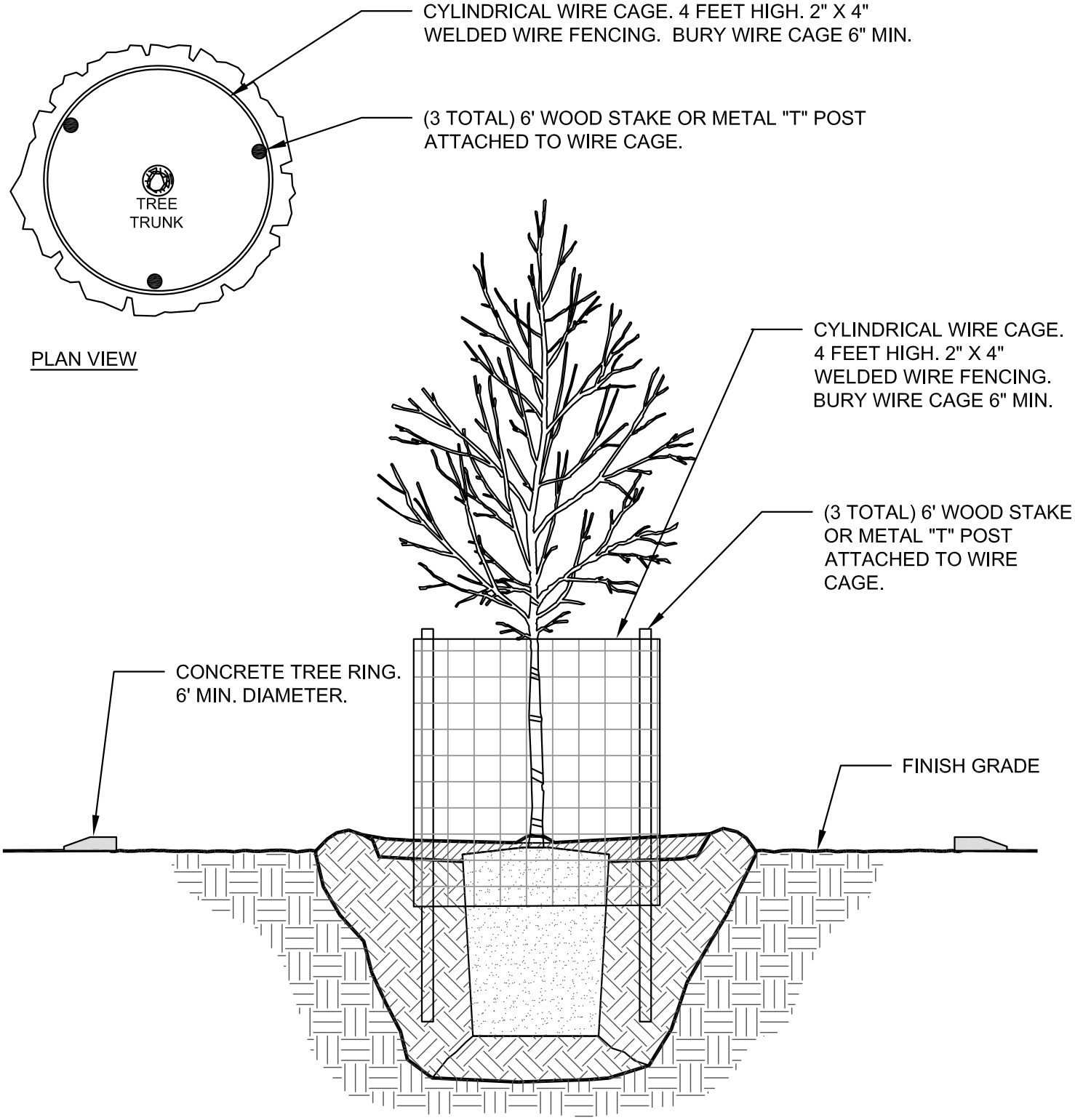

TREE PROTECTION (POPULUS SPECIES ONLY OR AS REQ'D BY CITY)

NOT TO SCALE

Planting Details
Tree Protection

Drawing No. 05
Rev. No. 0

BLUFFDALE

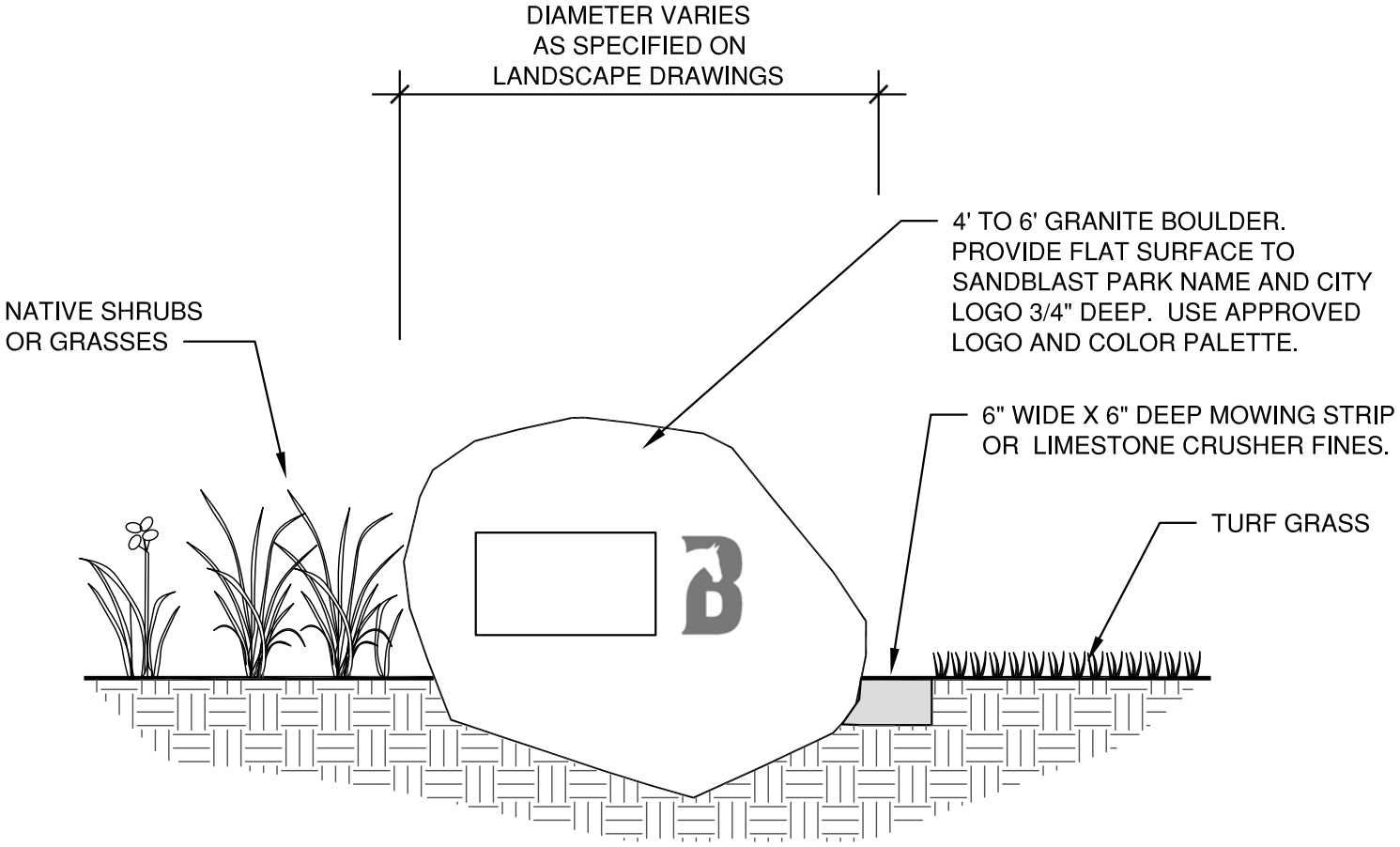

NATURAL AREA INSTALLATION

FORMAL / MAINTAINED INSTALLATION

NOTES:
1. ENSURE BOULDERS ARE COMPLETELY SETTLED AND STABLE. BURY TO A MINIMUM 1/3 TOTAL HEIGHT.
2. CONSULT WITH BLUFFDALE CITY FOR SIGN STANDARD.

PARK SIGNAGE - GRANITE BOULDER

NOT TO SCALE

Park Amenities Details
Park Signage - Granite

Drawing No. 01
Rev. No. 0

BLUFFDALE

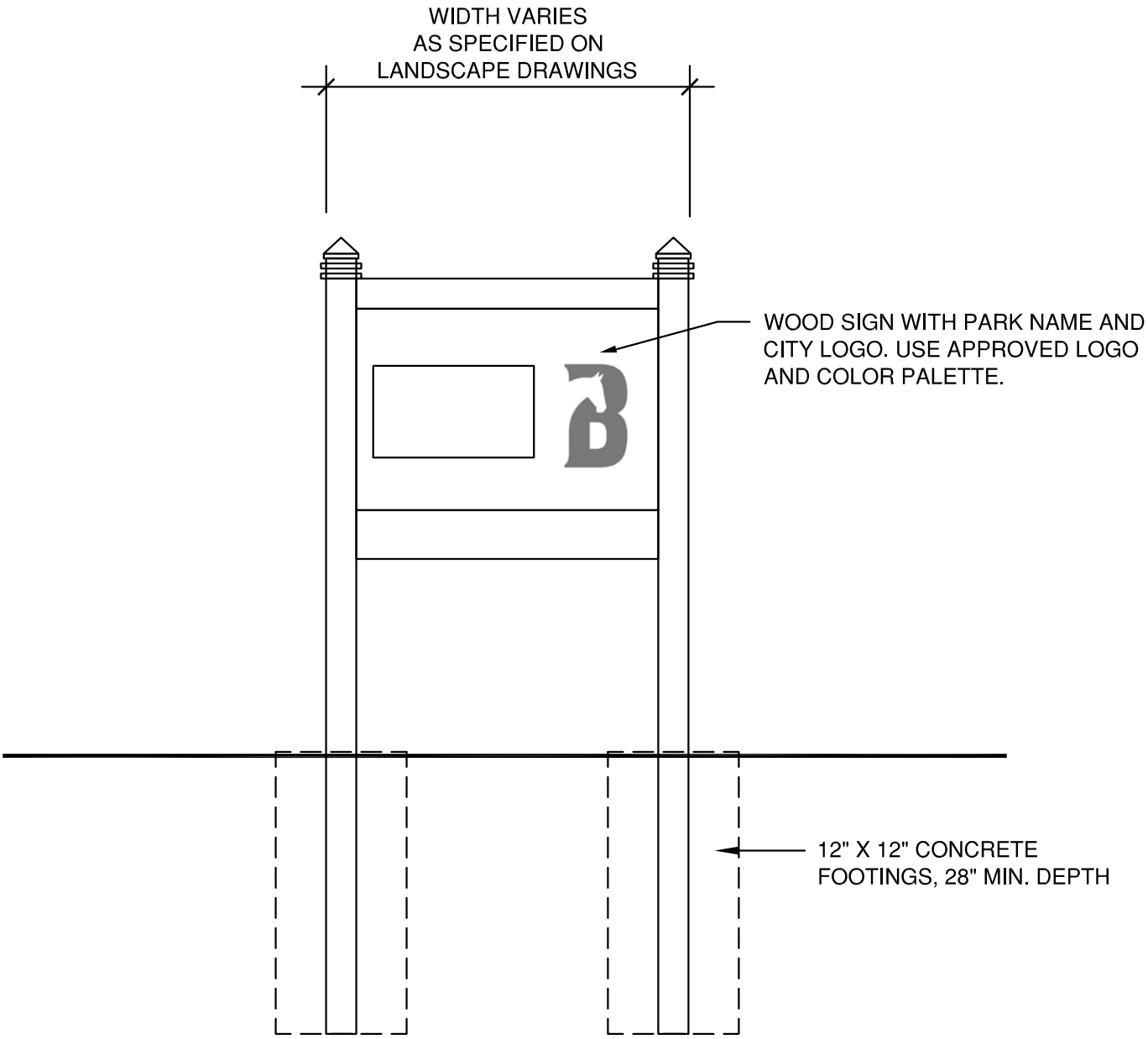

NOTE:
1. CONSULT WITH BLUFFDALE CITY FOR SIGN STANDARD.

PARK SIGNAGE - WOOD

NOT TO SCALE

Park Amenities Details
Park Signage - Wood

Drawing No. 02
Rev. No. 0

BLUFFDALE

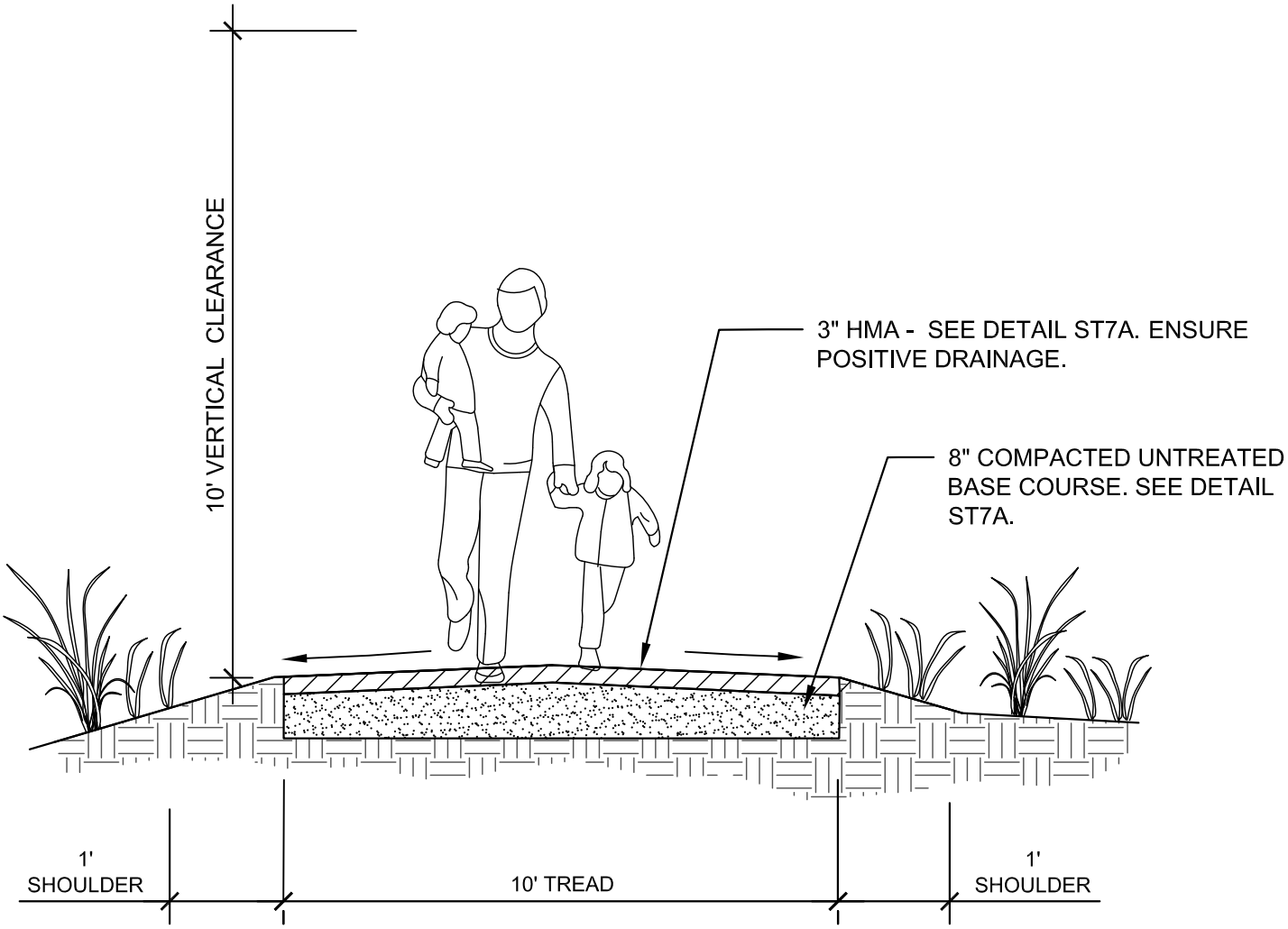

NOTES:
THE CONTRACTOR SHALL FURNISH AND DELIVER LIMESTONE CRUSHER FINES COMPOSED OF LIMESTONE ROCK CRUSHED INTO IRREGULAR AND ANGULAR PARTICLES. NO ROUNDED MATERIAL IS ACCEPTABLE. THE LIMESTONE CRUSHER FINES SHALL MEET THE FOLLOWING GRADATION SPECIFICATION:

SIEVE SIZE	PERCENT PASSING
3/8-INCH (9.52MM)	100%
NO. 4 (4.76 MM)	75 TO 92%
NO. 8 (2.38 MM)	50 TO 72%
NO. 16 (21.19 MM)	38 TO 55%
NO. 40 (0.42 MM)	20 TO 40%
NO. 100 (0.149 MM)	10 TO 22%
NO. 200 (0.074 MM)	8 TO 15%

TRAIL - LOCAL
NOT TO SCALE

Park Amenities Details
Trail - Local

Drawing No. 03
Rev. No. 0

BLUFFDALE

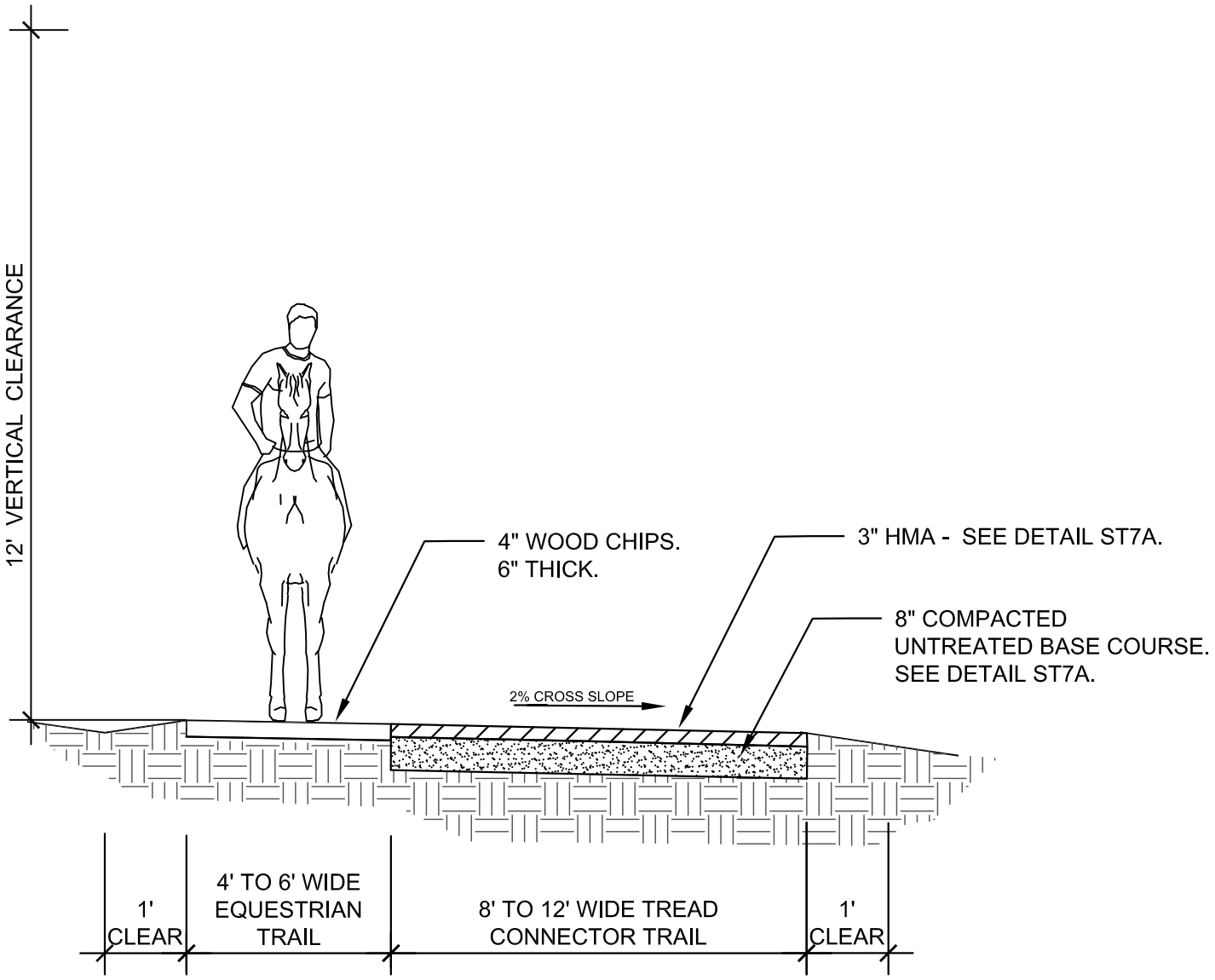

TRAIL - EQUESTRIAN

NOT TO SCALE

Park Amenities Details
Trail - Equestrian

Drawing No. 04
Rev. No. 0

BLUFFDALE

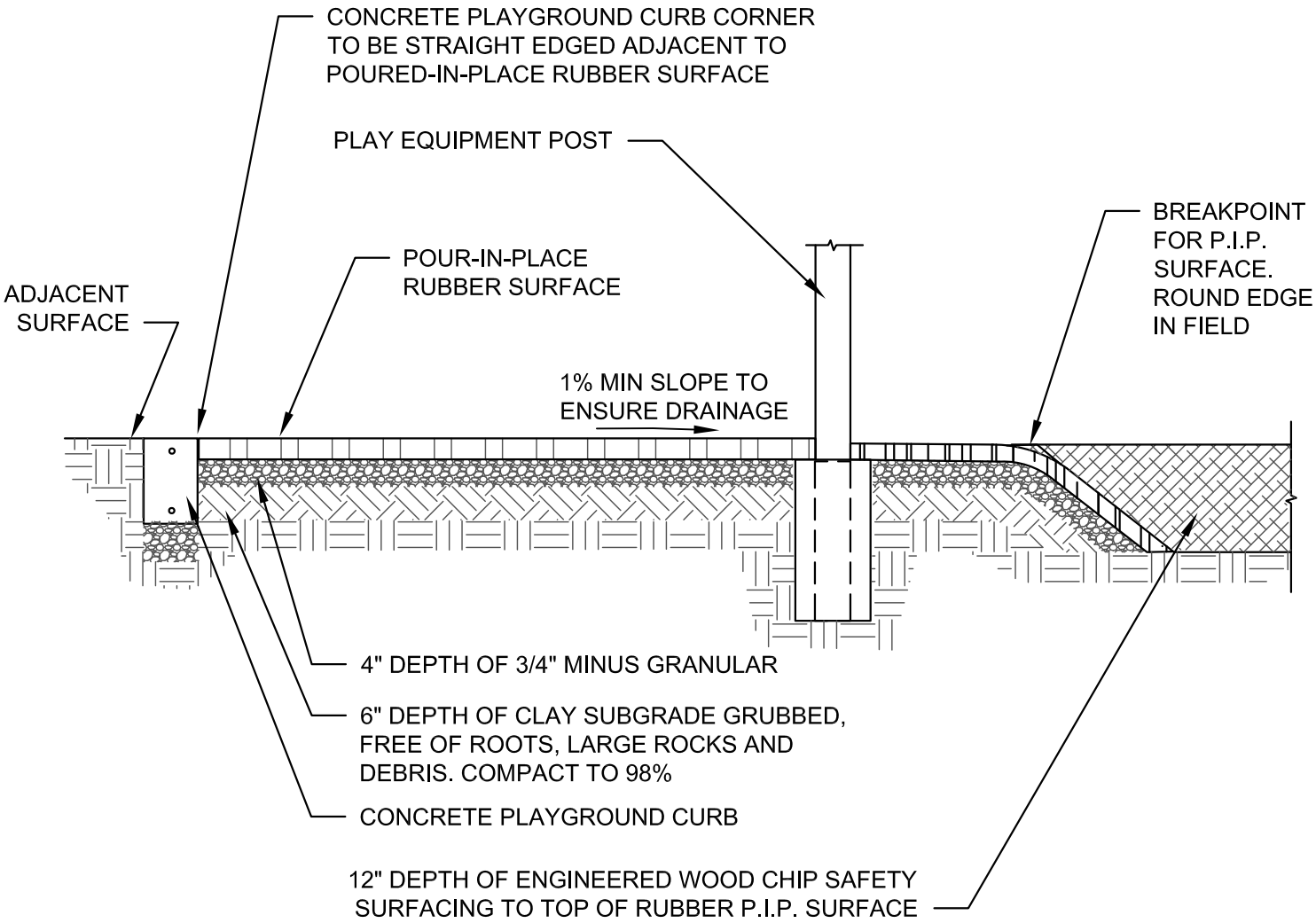

NOTE:
1. PLAYGROUND SAFETY SURFACE THAT ARE COMBINATIONS OF WOOD MULCH SURFACE AND CURB ADJACENT TO POUR-IN-PLACE RUBBER SURFACE IS TO BE SQUARE AND FLUSH.

PLAYGROUND SAFETY SURFACING

NOT TO SCALE

Park Amenities Details
Playground Safety Surfacing

Drawing No. 05
Rev. No. 0

BLUFFDALE

SECTION 32 84 00 - PLANTING IRRIGATION

PART 1 - GENERAL

1.1 SCOPE OF WORK

A. Furnish all labor and materials to construct a complete working and tested sprinkler irrigation system as per all drawings and specifications, providing head to head coverage on all planting areas on the site.

B. Furnish and install all materials to provide a working automatic sprinkler irrigation system. This includes the installation of electric valves, valve control devices, conduit, junction boxes, and all necessary wiring.

C. Perform all work in accordance with the drawings and specifications, as well as City water and electrical standards.

D. Operate and maintain until acceptance all constructed improvements, and guarantee the new system until all plants planted on this project have become established and have been accepted by the City.

1.2 ELECTRICAL POWER SERVICE

A. Make all arrangements with the local power company including, but not limited to, paying fees, making power connections, providing poles, weatherhead and meter, etc., as specified on the plans.

B. Bury all electrical lines or conduit, entering onto the site at a minimum of 24 inches or as required by applicable codes, whichever is greater.

1.3 SYSTEM PRESSURE

A. Provide a system that delivers the manufacturer's recommended minimum operating pressure or greater to every head while maintaining sufficient pressure to overcome the losses due to friction in the piping, fittings, and all other equipment.

PART 2 - PRODUCTS

2.1 PIPE

A. Provide that all pressure main line pipe and fittings smaller than 1-1/2 inch are Schedule 40 PVC and all pressure main line pipe and fittings 1-1/2 inch or larger are Schedule 80 PVC.

B. Use Schedule 40 PVC for all lateral line pipe and fittings smaller than 1-1/2 inch and use Schedule 80 PVC for all fittings 1-1/2 inch or larger.

C. No bends other than very gradual in pipe shall be permitted. Use elbow fittings of 90 and

45 degrees as the situations demand.

D. Handling and Installation of Pipe: Deliver all materials, pipes and fittings at the job site in a sound, undamaged condition. Remove any pipe found to be damaged or defective in workmanship or materials.

E. Every care shall be taken during installation to prevent dirt and debris (especially rocks) from getting into the pipes.

2.2 FITTINGS

A. Use P-70 primer and 7-11 cement on all solvent weld joints.

B. Use Teflon tape on all threaded fittings of two different types of material.

C. Place all tees coming out of main lines or valves and other fixtures so that no weight or pressure may be exerted through the fixture on the top or bottom of the main line. Tees shall be Schedule 80 SXSXS with SXT Schedule 80 bushing of appropriate size to the valves.

D. Place all tees coming out of the lateral lines for heads and other fixtures so that no direct weight or pressure may be exerted through the head to the top or bottom of the lateral line. Tees on lateral lines shall also be SXSXT to the head swing joints.

2.3 PIPE SLEEVES

A. Provide pipe sleeves when crossing a new pavement (concrete or asphalt). Use at least 2 inch (I.D.) larger than the pipes or wires being sleeved or encased. Sleeve wires separately. Use only Schedule 80 PVC or C900 pipe or as approved by the City for all pipe sleeves.

2.4 THRUST BLOCKS

A. Provide thrust blocks on all main lines 3 inches and larger wherever the main pipe line:

1. Changes any direction at tees, angles, and crosses vertical and horizontal.

2. Changes size at reducers.

3. Stops at a dead-end.

4. Valves at which thrust develops when closed.

B. The size and type of thrust block depends on pressure, pipe size, kind of soil, and type of fitting. For a 3 inch line at 50 PSI or less use at least one cubic foot of class AA (AE) Type II concrete for each thrust block.

C. Place thrust blocks against undisturbed original earth in the direction of thrust.

2.5 GATE VALVES

A. Furnish and install gate valves that conform to APWA specification C 509.

B. Unless otherwise shown or specified, provide flanged valves for all main line sized 2 inch and larger. Provide threaded end valves for all main line sized 1-1/2 inch and smaller. Use valves with non-rising stem and 2 inch square operating nuts. No handles or wheels are allowed unless valves are installed inside a structure. Install unions on each side of all valves except flanged valves. Use valves with a resilient wedge urethane rubber seat.

2.6 CONTROL VALVES

A. No valve shall be installed more than 12 inches below finished grade. Use Schedule 80 PVC pipe on all control valve manifolds.

2.7 SECONDARY WATER FILTERS

A. Install Amiad filter with 1000 micron (or tandem 500 and 1000 micron) and tamper proof cage on all systems using a secondary water source, or as approved by the City.

2.8 CONTROL VALVE BOXES

A. Use one jumbo valve box for each valve 2 inches and larger. Use one standard valve box for each valve smaller than 2 inches. Do not rest any parts of the valve box directly upon the valve or any fixture associated with it. Center each valve box on the valve it covers. Place 3 inches of clean drain gravel in the bottom underneath the valve and lines to reduce the potential of mud and standing water therein. Place filter fabric at the bottom of each valve box.

B. Connect wires to the valve inside a 3M-DBY connector. Seal each connector completely sealed and water proof with a minimum 24 inch wire loop.

C. Run extra wire and loop at all valve boxes that are at a main line terminus.

2.9 CONTROLLER SYSTEM

A. Provide and install only WeatherTRAK Series controllers or approved equal. Install according to the City and the manufacturer’s standards and specifications.

B. Install all controllers inside a stainless steel enclosure.

C. Provide conduit, wiring, materials, and all labor to make the controller operational and in compliance with local electrical codes.

D. Provide and install a master valve on each system.

E. Provide and install a flow sensor on each system.

2.10 HEADS

A. Install all heads above grade so as to minimize washing of the topsoil and seed during the landscaping establishment period. Install all heads which border paving or flat work of any kind at the finished grade of the adjacent paving or flat work. Raise or lower all heads to final planting grade prior to final acceptance of the project.

B. Flush thoroughly all pipes, lines, and risers with water before installation of any heads. Remove all debris and rocks found at that time from the area.

PART 3 - EXECUTION

3.1 EXCAVATION AND TRENCHING

A. Excavate trenches that are as deep and as wide as required to safely perform the work, such as making mainline connections or forming vaults.

B. Excavate trenches that are as deep and wide as required to provide working space for placing 2 inches of rock free sand or topsoil bedding underneath all new mainline pipe and fittings where the soil is rocky or gravelly. Place a minimum of 18 inches cover over the top of all pipe and fittings on main lines (lines which maintain a constant water pressure).

3.2 BACKFILL

A. Do not backfill any trenches until the system has been inspected for proper trench depths, installation of equipment, control wire, and location of heads by the Owner’s Representative or the City Inspector.

B. Do not backfill any trenches until the Owner’s Representative or the City Inspector verifies the redlined "as built" drawings showing that changes and corresponding dimensions have been recorded where changes have been made.

C. Pressurize the system to test for leaks and general operation of the equipment and system. Correct all defects and deficiencies.

D. Layer and backfill trenches at 6 inch lifts.

E. Use special care to assure complete compaction under the haunches of the pipe. Compacted and backfill under the haunches of the pipe to the original density.

F. Do not use backfill with rocks larger than 1 inch in diameter or any other debris. Backfill all trenches and then saturate trenches with water sufficiently to insure no settling of the surface after lawn is planted or sod is placed.

3.3 AS BUILT DRAWINGS OR PLANS

A. Keep an accurate record of exact dimensioned locations, grades, elevations, color of hot and spare wires - splice boxes and the size of all underground piping, valves, and drains. Show distances from columns, buildings, curbs, and similar permanent features on the

site. Provide coordinates in state plane for each of the following items: point of connection, isolation valve, control valves, and any other pertinent component of the irrigation system.

3.4 OPERATIONAL TEST AND MAJOR INSPECTIONS

A. Call the City Inspector for an operational test and major inspection of the sprinkler irrigation system. Give a minimum three day advance notice to the City Inspector so that proper scheduling can be done for those who are to attend.

3.5 GUARANTEE AND MAINTENANCE

A. Warrant all the completed and accepted items for a full year after the acceptance date by the City. Repair or replace any items that are defective or do not perform according to standards.

END OF SECTION 32 84 00

SECTION 32 92 00 - TURF GRASS

PART 1 - GENERAL

1.1 SUMMARY

A. This Section Includes:

1. Turf Grass Hydroseeding (only when approved as substitute for Turf Grass Sodding by Bluffdale City).

2. Turf Grass Sodding.

1.2 SUBMITTALS

Provide the following submittals:

A. Certification of Turf Grass Seed: Copy of purchase order stating the botanical and common name, percentage by weight of each species and variety, and percentage of purity, germination, and weed seed. Include the year of production and date of packaging.

B. Certification of Turf Grass Sod: Certification that turf sod is nursery grown. Certification indicating the date and time sod was cut at the nursery. Include identification of source and name and telephone number of supplier.

1.3 DELIVERY, STORAGE, AND HANDLING

Use caution when delivering, storing, and handling seed and sod. The following minimum requirements apply:

A. Seed: Deliver packaged materials in original, unopened containers showing weight, certified analysis, name and address of manufacturer.

B. Sod: Deliver sod within 24 hours of harvesting and in time for planting promptly. Protect sod from breakage and drying.

1.4 PROJECT CONDITIONS

A. Place turf grass seed and turf grass sod only after irrigation system is installed and operational.

B. Weather Limitations: Proceed with hydroseeding or sodding only when existing and forecasted weather conditions permit hydroseeding or sodding to be performed when beneficial and optimum results may be obtained.

PART 2 - PRODUCTS

2.1 USE SEED (ONLY WHEN APPROVED AS SUBSTITUTE FOR TURF GRASS SODDING BY THECITY).

The following requirements apply:

A. Grass Seed: Fresh, clean, dry, new-crop Kentucky bluegrass (*Poa pratensis*); a minimum of three cultivars.

2.2 SOD

A. Furnish viable sod of uniform density, color, and texture that is strongly rooted and capable of vigorous growth and development when planted. Species shall be Kentucky Blue Grass sod comprised of a minimum of three varieties and free of weeds

PART 3 - EXECUTION

3.1 TURF AREA PREPARATION

A. Complete all final grading, trench settling, topsoil placement, surface preparation, and irrigation work before hydroseeding or sodding begins.

B. Moisten prepared area before planting if soil is dry. Water thoroughly and allow surface to dry before planting. Do not create muddy soil.

C. Before planting, obtain Owner’s Representative acceptance of finish grading; restore hydroseeding or sodding areas if eroded or otherwise disturbed after finish grading.

D. Place topsoil at 4 inch minimum thickness.

E. Planting soil and topsoil shall have a PH of 6.0 to 8.0 and organic matter of 1 to 2 percent.

F. Sports fields to receive turf shall be graded for proper drainage. Where possible crown grade sports fields with a 1 percent to 1.5 percent slope uniformly from the center of the field to the sidelines, without pockets.

3.2 HYDROSEEDING SEED (ONLY WHEN APPROVED AS SUBSTITUTE FOR TURF GRASS SODDING BY BLUFFDALE CITY)

A. Hydroseeding: Mix specified seed, and fiber mulch in water, using equipment specifically designed for hydroseed application. Continue mixing until uniformly blended into homogeneous slurry suitable for hydraulic application. Spray-apply slurry uniformly to all areas to be seeded in a one-step process.

B. Lightly water and program the irrigation system to maintain a moist seedbed.

3.3 SODDING

A. Lay sod within 24 hours of harvesting. Do not lay sod if dormant or if ground is frozen or muddy.

B. Lay sod to form a solid mass with tightly fitted joints. Butt ends and sides of sod; do not stretch or overlap. Stagger sod strips or pads to offset joints in adjacent courses. Avoid damage to soil or sod during installation. Tamp and roll lightly to ensure contact with soil, eliminate air pockets, and form a smooth surface. Work sifted soil or fine sand into minor cracks between pieces of sod; remove excess to avoid smothering sod and adjacent grass.

1. Lay sod across slopes exceeding 1:3.

2. Anchor sod on slopes exceeding 1:6 with wood pegs spaced as recommended by sod manufacturer but not less than two anchors per sod strip to prevent slippage.

C. Saturate sod with fine water spray within two hours of planting. During first week after planting, water daily or more frequently as necessary to maintain moist soil to a minimum depth of 1-1/2 inches below sod.

3.4 TURF MAINTENANCE

A. General: Maintain and establish turf by watering, fertilizing, weeding, mowing, trimming, replanting, and performing other operations as required to establish healthy, viable turf. Roll, regrade, and replant bare or eroded areas and re-mulch to produce a uniformly smooth turf. Provide materials and installation the same as those used in the original installation.

1. Fill in as necessary soil subsidence that may occur because of settling or other processes. Replace materials and turf damaged or lost in areas of subsidence.

2. Apply treatments as required to keep turf and soil free of pests and pathogens or disease. Use integrated pest management practices whenever possible to minimize the use of pesticides and reduce hazards.

B. Mow turf as soon as top growth is tall enough to cut. Repeat mowing to maintain specified height without cutting more than one-third of grass height. Remove no more than one-third of grass-leaf growth in initial or subsequent mowings. Do not delay mowing until grass blades bend over and become matted. Do not mow when grass is wet

3.5 SATISFACTORY TURF

A. Turf installations shall meet the following criteria as determined by Owner’s Representative:

1. Satisfactory Seeded Turf Grass: At end of maintenance period, a healthy, uniform, close stand of grass has been established, free of weeds and surface irregularities.

2. Satisfactory Sodded Turf Grass: At end of maintenance period, a healthy, well-rooted, even-colored, viable turf has been established, free of weeds, open joints, bare areas, and surface irregularities.

B. Use specified materials to reestablish turf that does not comply with requirements, and continue maintenance until turf is satisfactory.

3.6 CLEANUP AND PROTECTION

A. Promptly remove soil and debris created by turf work from paved areas. Clean wheels of vehicles before leaving site to avoid tracking soil onto roads, walks, or other paved areas.

B. Remove surplus soil and waste material, including excess subsoil, unsuitable soil, trash, and debris, and legally dispose of them off Owner's property.

C. Erect temporary fencing or barricades and warning signs as required to protect newly planted areas from traffic. Maintain fencing and barricades throughout initial maintenance period and remove after hydroseed or sod are established.

END OF SECTION 32 92 00

SECTION 32 93 00 - PLANTS

PART 1 - GENERAL

1.1 SUMMARY

A. This Section Includes:

1. Plants.

2. Planting soils.

1.2 SUBMITTALS

A. Product Data: For each type of product indicated.

1. Plant Materials: Include quantities, sizes, quality, and sources for plant materials.

B. Samples for Verification: For each of the following:

1. Trees and Shrubs: Three samples of each variety and size delivered to the site for review. Maintain approved samples on-site as a standard for comparison.

2. Organic Mulch: 1-pint volume of organic mulch required; in sealed plastic bag labeled with composition of materials by percentage of weight and source of mulch. Each Sample shall be typical of the lot of material to be furnished; provide an accurate representation of color, texture, and organic makeup.

C. Qualification Data: For qualified landscape Installer, include list of similar projects completed by Installer demonstrating Installer's capabilities and experience. Include project names, addresses, and year completed, and include names and addresses of owners' contact persons.

1.3 QUALITY ASSURANCE

A. Installer Qualifications: A qualified landscape Installer whose work has resulted in successful establishment of plants.

1. Installer's Field Supervision: Have an experienced full-time supervisor on Project site when work is in progress.

B. Measurements: Measure according to ANSI Z60.1. Do not prune to obtain required sizes.

1. Trees and Shrubs: Measure with branches and trunks or canes in their normal position. Take height measurements from or near the top of the root flare for field-grown stock and container grown stock. Measure main body of tree or shrub for height and spread; do not measure branches or roots tip to tip. Take caliper

measurements 6 inches above the root flare for trees up to 4-inch caliper size, and 12 inches above the root flare for larger sizes.

C. Plant Material Observation: Owner's Representative may observe plant material either at place of growth or at site before planting for compliance with requirements for genus, species, variety, cultivar, size, and quality. Owner's Representative retains right to observe trees and shrubs further for size and condition of balls and root systems, pests, disease symptoms, injuries, and latent defects and to reject unsatisfactory or defective material at any time during progress of work. Remove rejected trees or shrubs immediately from Project site.

1. Notify Owner's Representative of sources of planting materials a minimum of seven days in advance of delivery to site.

1.4 DELIVERY, STORAGE, AND HANDLING

A. Packaged Materials: Deliver packaged materials in original, unopened containers showing weight, certified analysis, name and address of manufacturer, and indication of conformance with state and federal laws if applicable.

B. Do not prune trees and shrubs before delivery. Protect bark, branches, and root systems from sun scald, drying, wind burn, sweating, whipping, and other handling and tying damage. Do not bend or bind-tie trees or shrubs in such a manner as to destroy their natural shape. Provide protective covering of plants during shipping and delivery. Do not drop plants during delivery and handling.

C. Handle planting stock by root ball.

D. Deliver plants after preparations for planting have been completed, and install immediately. If planting is delayed more than six hours after delivery, set plants and trees in their appropriate aspect (sun, filtered sun, or shade), protect from weather and mechanical damage, and keep roots moist.

1. Do not remove container-grown stock from containers before time of planting.

2. Water root systems of plants stored on-site deeply and thoroughly with a fine-mist spray. Water as often as necessary to maintain root systems in a moist, but not overly-wet condition.

1.5 PROJECT CONDITIONS

A. Field Measurements: Verify actual grade elevations, service and utility locations, irrigation system components, and dimensions of plantings and construction contiguous with new plantings by field measurements before proceeding with planting work.

B. Planting Restrictions: Plant during the following periods. Coordinate planting periods with maintenance periods to provide required maintenance from date of Substantial Completion.

1. Fall Planting (Optimal): September 15- December 1.

2. Spring Planting: Not later than May 31.

3. Alternate Planting: As approved by the City.

C. Season Limitations: Proceed with planting only when existing and forecasted weather conditions permit planting to be performed when beneficial and optimum results may be obtained. Apply products during favorable weather conditions according to manufacturer's written instructions and warranty requirements.

D. Coordination with Seeded Areas: Plant trees, shrubs, and other plants after finish grades are established and before planting seeded areas unless otherwise indicated.

1. When planting trees, shrubs, and other plants after planting seeded areas, protect seed areas and promptly repair damage caused by planting operations.

1.6 WARRANTY

A. Special Warranty: Installer agrees to repair or replace plantings and accessories that fail in materials, workmanship, or growth within specified warranty period.

1. Failures include, but are not limited to, the following:

a. Death and unsatisfactory growth, except for defects resulting from abuse, lack of adequate maintenance, or neglect by Owner, or incidents that are beyond Contractor's control.

b. Structural failures including plantings falling or blowing over.

2. Warranty Periods from Date of Substantial Completion:

a. Trees, Shrubs: 12 months.

3. Include the following remedial actions as a minimum:

a. Immediately remove dead plants and replace unless required to plant in the succeeding planting season.

b. Replace plants that are more than 25 percent dead or in an unhealthy condition at end of warranty period.

c. A limit of one replacement of each plant will be required except for losses or replacements due to failure to comply with requirements.

d. Provide extended warranty for period equal to original warranty period, for replaced plant material.

PART 2 - PRODUCTS

2.1 PLANT MATERIAL

A. General: Furnish nursery-grown plants true to genus, species, variety, cultivar, stem form, shearing, and other features indicated in Plant Schedule or Plant Legend shown on Drawings and complying with ANSI Z60.1; and with healthy root systems developed by transplanting or root pruning. Provide well-shaped, fully branched, healthy, vigorous stock, densely foliated when in leaf and free of disease, pests, eggs, larvae, and defects such as knots, sun scald, injuries, abrasions, and disfigurement.

1. Trees with damaged, crooked, or multiple leaders; tight vertical branches where bark is squeezed between two branches or between branch and trunk ("included bark"); crossing trunks; cut-off limbs more than 3/4 inch in diameter; or with stem girdling roots will be rejected.

2. Collected Stock: Do not use plants harvested from the wild, from native stands, from an established landscape planting, or not grown in a nursery unless otherwise indicated.

B. Provide plants of sizes, grades, and ball or container sizes complying with ANSI Z60.1 for types and form of plants required. Plants of a larger size may be used if acceptable to Owner’s Representative, with a proportionate increase in size of roots or balls. Tree size shall be a minimum of 2 inch caliper.

C. Root-Ball Depth: Furnish trees and shrubs with root balls measured from top of root ball, which shall begin at root flare according to ANSI Z60.1. Root flare shall be visible before planting.

D. Labeling: Label at least one plant of each variety, size, and caliper with a securely attached, waterproof tag bearing legible designation of common name and full scientific name, including genus and species. Include nomenclature for hybrid, variety, or cultivar, if applicable for the plant as shown on Drawings.

2.2 PLANTING SOILS

A. Planting Soil: Use existing, in-place surface soil or approved imported topsoil. Verify suitability of existing surface soil to produce viable planting soil. Remove stones, roots, plants, sod, clods, clay lumps, pockets of coarse sand, concrete slurry, concrete layers or chunks, cement, plaster, building debris, and other extraneous materials harmful to plant growth.

B. Place topsoil at 4 inch minimum thickness.

C. Planting soil and topsoil shall have a PH of 6.0 to 8.0 and organic matter of 1 to 2 percent.

2.3 MULCHES

A. Organic Mulch: Free from deleterious materials and suitable as a top dressing of trees and shrubs, consisting of one of the following:

1. Type: Ground or shredded bark.

2. Size Range: 3 inches maximum, 1/2 inch minimum.

3. Color: Natural.

PART 3 - EXECUTION

3.1 EXAMINATION

A. Examine areas to receive plants for compliance with requirements and conditions affecting installation and performance.

1. Verify that no foreign or deleterious material or liquid such as paint, paint washout, concrete slurry, concrete layers or chunks, cement, plaster, oils, gasoline, diesel fuel, paint thinner, turpentine, tar, roofing compound, or acid has been deposited in soil within a planting area.

2. Uniformly moisten excessively dry soil that is not workable and which is too dusty.

B. Proceed with installation only after unsatisfactory conditions have been corrected.

C. If contamination by foreign or deleterious material or liquid is present in soil within a planting area, remove the soil and contamination as directed by Owner's Representative and replace with new planting soil.

D. A City Representative shall inspect and approve all tree planting pits before the backfill material is placed around the root ball.

3.2 PREPARATION

A. Protect structures, utilities, sidewalks, pavements, and other facilities and existing plants from damage caused by planting operations.

B. Install erosion-control measures to prevent erosion or displacement of soils and discharge of soil-bearing water runoff or airborne dust to adjacent properties and walkways.

C. Lay out plants at locations directed by Owner's Representative. Stake locations of individual trees and shrubs and outline areas for multiple plantings.

3.3 PLANTING AREA ESTABLISHMENT

A. Loosen subgrade of planting areas to a minimum depth of 6 inches. Remove stones larger than 1 inch in any dimension and sticks, roots, rubbish, and other extraneous matter and legally dispose of them off Owner's property.

B. Finish Grading: Grade planting areas to a smooth, uniform surface plane with loose, uniformly fine texture. Roll and rake, remove ridges, and fill depressions to meet finish grades.

C. Before planting, obtain Owner’s Representative's acceptance of finish grading; restore planting areas if eroded or otherwise disturbed after finish grading.

3.4 EXCAVATION FOR TREES AND SHRUBS

A. Planting Pits and Trenches: Excavate circular planting pits with sides sloping inward at a 45-degree angle. Excavations with vertical sides are not acceptable. Trim perimeter of bottom leaving center area of bottom raised slightly to support root ball and assist in drainage away from center. Do not further disturb base. Ensure that root ball will sit on undisturbed base soil to prevent settling. Scarify sides of planting pit smeared or smoothed during excavation.

1. Excavate approximately three times as wide as ball diameter for container-grown stock.

2. Excavate at least 12 inches wider than root spread and deep enough to accommodate vertical roots for bare-root stock.

3. Do not excavate deeper than depth of the root ball, measured from the root flare to the bottom of the root ball.

4. If area under the plant was initially dug too deep, add soil to raise it to the correct level and thoroughly tamp the added soil to prevent settling.

5. Maintain required angles of repose of adjacent materials as shown on the Drawings. Do not excavate subgrades of adjacent paving, structures, hardscapes, or other new or existing improvements.

6. Maintain supervision of excavations during working hours.

7. Keep excavations covered or otherwise protected when unattended by Installer's personnel.

B. Subsoil and topsoil removed from excavations may be used as planting soil.

C. Fill excavations with water and allow to percolate away before positioning trees and shrubs.

3.5 TREE, AND SHRUB PLANTING

A. Before planting, verify that root flare is visible at top of root ball according to ANSI Z60.1. If root flare is not visible, remove soil in a level manner from the root ball to where the top-most root emerges from the trunk. After soil removal to expose the root flare, verify that root ball still meets size requirements.

B. Remove stem girdling roots and kinked roots. Remove injured roots by cutting cleanly; do not break.

C. Set container-grown stock plumb and in center of planting pit or trench with root flare 1 inch above adjacent finish grades.

1. Backfill around root ball in layers, tamping to settle soil and eliminate voids and air pockets. When planting pit is approximately one-half filled, water thoroughly before placing remainder of backfill. Repeat watering until no more water is absorbed.

2. Continue backfilling process. Water again after placing and tamping final layer of soil.

3.6 TREE AND SHRUB PRUNING

A. Remove only dead, dying, or broken branches. Do not prune for shape.

B. Prune, thin, and shape trees, shrubs, and vines as directed by Owner's Representative.

C. Prune, thin, and shape trees, shrubs, and vines according to standard professional horticultural and arboricultural practices. Unless otherwise indicated by Owner's Representative, do not cut tree leaders; remove only injured, dying, or dead branches from trees and shrubs; and prune to retain natural character.

D. Do not apply pruning paint to wounds.

3.7 PLANTING AREA MULCHING

A. Mulch backfilled surfaces of planting areas and other areas indicated.

1. Trees and Shrubs: Apply organic mulch ring of 3-inch minimum thickness, with 24-inch radius around trunks or stems. Do not place mulch within 3 inches of trunks or stems.

3.8 CLEANUP AND PROTECTION

A. During planting, keep adjacent paving and construction clean and work area in an orderly condition.

B. Protect plants from damage due to landscape operations and operations of other contractors and trades. Maintain protection during installation and maintenance periods. Treat, repair, or replace damaged plantings.

C. After installation and before Substantial Completion remove nursery tags, nursery stakes, tie tape, labels, wire, burlap, and other debris from plant material, planting areas, and Project site.

3.9 DISPOSAL

A. Remove surplus soil and waste material including excess subsoil, unsuitable soil, trash, and debris and legally dispose of them off Owner's property.

END OF SECTION 32 93 00

OUTDOOR RECREATION AREAS RESTROOMS

This Section Includes:

1. Restroom Building Guidelines

2. Outdoor Toilet Facilities Availability Guidelines.

PART 1 - RESTROOM BUILDING GUIDELINES

1.1 PREFABRICATED VAULT TOILET BUILDINGS

A. Prefabricated vault toilet buildings shall be made of concrete or masonry. Buildings and walks shall comply with accessibility standards in place at the time they are constructed. Walks shall be sloped to drain away from the building at a slope of not more than 2 percent including construction tolerances. The building shall be oriented for unobstructed solar heat gain to the vent pipe(s) that is (are) located on the outside of the building. For the building's odor free technology to be effective there should be a positive upward draw through the vents, which is dependent on their solar heat gain. Therefore, it is important to orient the building with the vent(s) on the south side. If the building is lit, solar panels can be used, and they shall be properly oriented for maximum solar gain. Vault toilet buildings can feature obscure windows of vandal-resistant materials, such as polycarbonate resins. The access to the building and the interior of the building shall be fully accessible, shall be on an accessible route, and served by nearby accessible parking, including remote locations.

1.2 BUILDING FACILITIES

A. Toilet facilities for both men and women shall include one accessible water closet, lavatory, soap dispenser, and towel dispenser. There may be a unisex room, with separate entry, provided for special needs use or for family groups. This room shall include an ample-sized counter suitable for changing diapers. All fixtures in the unisex room shall be accessible. As an option, the toilet in the unisex room may be installed as a composting or vault toilet, which would provide toilet facilities in cold months when water to the building is turned off. The building shall include a covered entry with an outdoor drinking fountain and a hose bib for maintenance use. A pipe chase shall be located in the middle of the building and shall be accessible from the rear of the building. As an option, a utility sink may be located in the chase. Inside the building, along the inside walls, a trench floor drain shall provide necessary drainage without impeding accessibility. Interior areas shall be well lit and ventilated by clerestory windows and louvers. Interior walls shall have vandal-resistant finishes. Windows shall be made of high-impact-resistant polycarbonate resin. All new buildings shall be designed with sustainability in mind. Toilets shall be low-volume flush, and lighting shall use energy-efficient fixtures and bulbs. The building can include solar panels to provide electricity.

1. Fixtures for Men: Two lavatories (sinks, one accessible), one water closet (toilet stall and one urinal; both accessible), and accessible features (soap dispenser, towel dispenser or hand dryer, and waste receptacle).

2. Fixtures for Women: Two lavatories (sinks, one accessible), two water closets (toilet stall, one accessible), and accessible features (soap dispenser, towel dispenser or hand dryer, and waste receptacle).

3. Fixtures for Unisex: One lavatory, one water closet, soap dispenser, towel dispenser or hand dryer and waste receptacle (all fully accessible).

4. Chase Fixtures: One utility sink (optional).

5. Exterior Fixtures: One drinking fountain (accessible high-low unit) with some type of detectable warning on the approach to the "high" unit or install the fountains in an alcove that meets accessibility.

PART 2 - OUTDOOR TOILET FACILITIES AVAILIBILITY GUIDELINES

2.1 LINEAR PARKS AND TRAILS

A. General: Furnish outdoor toilet facilities under the following guidelines.

1. During months of the year when the peak monthly temperature is above 50, any multi-use trails system accommodating 2,000 trail users per day shall provide toilet facilities at no greater than 3 mile intervals.

2. During the months of the year where the peak monthly temperature is below 50, any multi-use trails system accommodating 500 trail users shall provide toilet facilities at no greater than 3-mile intervals.

3. Trail and Park maps shall include restroom location symbols and time of day availability information.

4. During closure of permanent facilities, portable restrooms shall be provided.

2.2 ATHLETIC FIELDS

A. General: Furnish outdoor toilet facilities under the following guidelines.

1. Provide toilet facilities within 1/3 mile for athletic fields during team activity.

2. Provide toilet facilities for athletic fields when at least one team event per week is expected.

3. Toilet facilities should be provided at athletic fields when during a given week there are days when usage reaches 50 individuals per day.

END OF SECTION

PARK AMENITIES GUIDELINES

Park amenities such as park pavilions, picnic shelters, picnic tables, benches, drinking fountains, playground equipment, and all other site furnishings shall be approved by the City at the design stage of all park and recreation landscape projects.

END OF SECTION

Agenda Item 7

REQUEST FOR CITY COUNCIL ACTION

To:	**Mayor and City Council**
From:	**Jennifer Robison, Senior Planner**
Date:	**7 July 2016**
Business Date:	**13 July 2016**
Subject:	**Preliminary and Final Subdivision Plat Application for Taylor Acres at approximately 1950 West 14400 South for six (6) residential lots in the R-1-43 Zone.**
Staff Presentation:	**Grant Crowell**

RECOMMENDATION:

To approve the Taylor Acres Preliminary and Final Subdivision Plat Application as recommended by the Planning Commission on July 6, 2016.

BACKGROUND:

The applicant desires the City Council to consider the Preliminary and Final Plat for Taylor Acres concurrently as permitted by the City subdivision ordinances. The applicant is proposing six residential lots complying with the one acre minimum lot size in the R-1-43 Zone which is also consistent with the General Plan of very low density residential.

Due to the future widening of 14400 South, the applicant understands some land may be required from the proposed property for the improvements. The applicant has reviewed several layout concepts with City Staff with the intent to meet the City ordinances, but due to the possible reduction of property for road widening is now proposing a private street with a cul-de-sac. The cross-section of the street is less than City standard for a portion of the street. The policies in question for this application are the reduction of the street standard making this a private street and providing a cul-de-sac rather than stubbing the road to adjacent properties as the City Code Section 12-5-3-C.4 states *"Proposed streets shall be extended to the boundary lines of the tract to be subdivided, unless prevented by topography or other physical conditions, or unless in the opinion of the planning commission and/or city council such an extension is not necessary or desirable for the coordination of the layout of the subdivision with the existing layout or the most advantageous future development of adjacent tracts.* The width of the pavement for the private street will still comply with the standard, but will not provide a sidewalk or parkstrip on the east side. The cul-de-sac will be built to City standard to ensure safety for emergency and utility vehicles to turn around.

The access on 14400 South is close in proximity to Frost Court across the street and does not meet the required offset of 150 feet for intersection traffic movements. The applicant made application to the Board of Adjustment and was granted a variance to Section 12-5-3-O.2 requiring 150 feet to up to 36.1 feet for the offset intersection alignment with the following conditions:

1. That the variance allows an offset intersection up to 36.1' (as previously approved in the original variance).
2. That the curb and gutter along the property be placed at the final or build out to City engineer recommendations.
3. That Taylor Ridge Lane shall be constructed as a ¾ intersection, prohibiting left turn egress movements onto 14400 South, while permitting right-turn egress and left and right-turn ingress.
4. That a raised island be placed at the entrance to the subdivision preventing any left movement when exiting subdivision.
5. That all other requirements and recommendations included in traffic impact study for the subdivision shall be followed.

PREVIOUS ACTIONS

- July 6, 2016: Planning Commission recommended approval.
- May 3, 2016: Board of Adjustment revised approval.
- February 2, 2016: Board of Adjustment approval.

SUPPORTING DOCUMENTS

- Staff Report to Planning Commission
- BOA Approval Letter

Development Review Committee
14175 South Redwood Road
Bluffdale, UT 84065
801.254.2200(o) 801.446.8642(f) TTY 7-1-1

DRC STAFF REPORT
1 July 2016

To: City of Bluffdale Planning Commission
Prepared By: Jennifer Robison, Senior Planner, on behalf of the DRC

Re: Taylor Acres Preliminary and Final Subdivision Plat

Application No.:	2016-29
Applicant(s):	Greyfriars Estates, LLC Ken Milne
Project Location:	Approximately 1950 West 14400 South
General Plan:	Very Low Density Residential
Zoning:	R-1-43
Acreage:	6.53 acres
Request:	Recommendation of Preliminary and Final Subdivision Plat for six (6) residential one acre minimum lots with a private street.

SUMMARY

The applicant desires the Planning Commission and City Council to consider the Preliminary and Final Plat for Taylor Acres concurrently as permitted by the City subdivision ordinances. The applicant also desires to propose a private street cross-section with a cul-de-sac which does not completely meet current City ordinances. The applicant has reviewed several layout concepts with the intent to meet the City ordinances, but due to property and access constraints, the applicant has submitted the proposed applications as the optimum outcome for development of the subject property.

ANALYSIS

Anticipated Uses and Layout.
The subdivision of the property will provide six one acre lots for new homes and provide one point of ingress and egress access from 14400 South into a private cul-de-sac.

Private Street. With limited frontage along 14400 South to meet street cross-section standards and maintain one acre lot development, the applicant is proposing a modified street cross-section that would be a private street with ownership and maintenance by homeowners. The entrance provides 36' for the length of access to where the property widens to the north which then provides 52' which is City standard. The design of the private street anticipates when the property owner to the east chooses to develop property in the future, the access may be widened, if needed and access provided from Taylor Ridge Court which would limit one more access onto 14400 South and be more desirable by the City.

Intersection Offset. The access on 14400 South is close in proximity to Frost Court across the street and does not meet the required offset of 150 feet for intersection traffic movements. The applicant made application to the Board of Adjustment and was granted a variance to Section 12-5-3-O.2 requiring 150 feet to up to 36.1 feet for the offset intersection alignment with the following conditions:

1. That the variance allows an offset intersection up to 36.1' (as previously approved in the original variance).
2. That the curb and gutter along the property be placed at the final or build out to City engineer recommendations.
3. That Taylor Ridge Lane shall be constructed as a ¾ intersection, prohibiting left turn egress movements onto 14400 South, while permitting right-turn egress and left and right-turn ingress.
4. That a raised island be placed at the entrance to the subdivision preventing any left movement when exiting subdivision.
5. That all other requirements and recommendations included in traffic impact study for the subdivision shall be followed.

Cul-de-sac design. City Code Section 12-5-3-C.4 states *"Proposed streets shall be extended to the boundary lines of the tract to be subdivided, unless prevented by topography or other physical conditions, or unless in the opinion of the planning commission and/or city council such an extension is not necessary or desirable for the coordination of the layout of the subdivision with the existing layout or the most advantageous future development of adjacent tracts.* The Planning Commission may consider if access to adjacent properties is desired for future development or if the cul-de-sac is appropriate at this location and best suited for the proposed subdivision. The cul-de-sac as designed provides the necessary turning radius for emergency vehicles and adequate access is provided from 14400 South for the entire subdivision.

Future Widening of 14400 South. Understanding development growth within the City, 14400 South is planned to be improved at a future date which may require more width from property owners. The proposed design of the subdivision provides a 10' road dedication along 14400 South to accommodate future widening of the road.

Adequate Public Utilities and Infrastructure. All adequate public utilities exist or will be created with the project construction for this project.

Lot Sizes, Setbacks. Lot sizes are one acre excluding the private street. The frontage and width of the lots meet the minimum requirement of 125' and 30' in the cul-de-sac. Building envelopes are shown on each lot with the required setbacks of front – 30 feet, side and rear – 20 feet for primary buildings.

Secondary Water Shares. City ordinance requires secondary water shares to be provided in the name of the City and subdivision. Water share certificates with the adequate water requirement of 3 acre feet per gross acre of real property developed shall be acquired and provided to the City by the applicant prior to the recordation of the final plat.

DRC REVIEW AND COMMENTS

On behalf of the City Manager, the City's staff involved in development review and administration meets together as a Development Review Committee (DRC). The DRC generally consists of the City Manager, City Attorney, City Engineer, Public Works Operations Manager, the City Planner, and other outside consultants as needed from time to time. The comments of the DRC members have been included in this staff report and

the recommended conditions of approval for the project.

City Engineer. There are no outstanding requirements by the City Engineer and Public Works Department. The layout, design and construction of all subdivisions are subject to the Bluffdale City Engineering Standards and Specifications or recommendations of the City Engineer. These requirements are included in the recommended conditions of approval.

Fire Chief. Fire Chief Roberts approved the plans as submitted.

City Planner. The Planning Division is recommending approval with the recommended conditions.

DRC STAFF RECOMMENDATION FOR TAYLOR ACRES PRELIMINARY AND FINAL PLAT APPLICATION:

DRC Staff recommends that the Planning Commission forward a positive recommendation to the City Council for the Taylor Acres Preliminary and Final Subdivision Plat Application subject to the following conditions:

1. That all requirements of the City Code and adopted ordinances or modifications made by the Planning Commission and City Council are met and adhered to for the proposed subdivision.
2. That the plat comply with the Bluffdale City Engineering Standards and Specifications and all recommendations by the City Engineer and Public Works Department for all relevant construction and plat drawings prior to recordation of the final plat.
3. That the conditions of approval for the variance as described above be identified in all relevant construction drawings and approved by the City Engineer.
4. That the project adheres to all requirements of the International Fire Code.
5. That prior to any grading of property or construction, a land disturbance permit be approved and construction activities be coordinated with the City Engineer's office.
6. That adequate secondary water shares be provided to the City prior to recordation of the final plat.

MODEL MOTIONS FOR TAYLOR ACRES:

Motion for a Positive Recommendation – "I move we forward a positive recommendation to the City Council for the Taylor Acres Preliminary and Final Subdivision Plat Application 2016-29 subject to the conditions and based on the findings presented in the staff report dated July 01, 2016, (or as modified by the conditions below):"

1. List any additional findings and/or conditions…

Motion for a Negative Recommendation – "I move we forward a negative recommendation to the City Council for the Taylor Acres Preliminary and Final Subdivision Plat Application 2016-29 based on the following findings:"

1. List all findings for denial…

Taylor Acres
R-1-43 Zone
6 Residential Lots
14270 S
2200 W
14400 S
FROST CT

TAYLOR ACRES SUBDIVISION

LOCATED IN THE NORTH HALF NORTHWEST QUARTER OF SECTION 10, TOWNSHIP 4 SOUTH, RANGE 1 WEST, SALT LAKE BASE & MERIDIAN BLUFFDALE CITY, SALT LAKE COUNTY, UTAH

VICINITY MAP
NOT TO SCALE

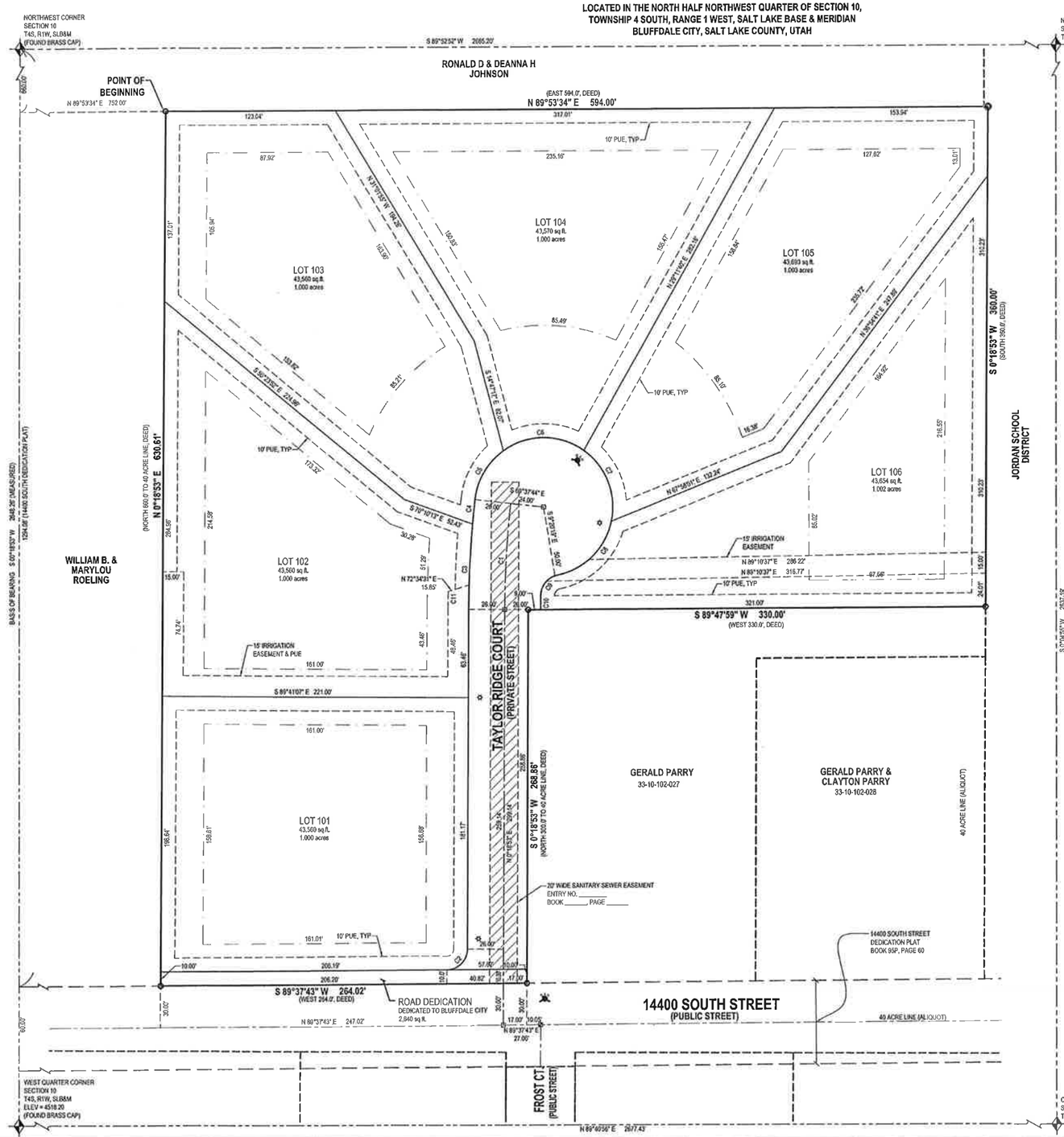

LEGEND

- EXISTING STREET MONUMENT
- PROPOSED STREET MONUMENT
- SECTION CORNER
- ENSIGN ENG. LAND SURV. — SET 5/8" REBAR WITH YELLOW PLASTIC CAP, OR NAIL STAMPED "ENSIGN ENG. & LAND SURV."
- BOUNDARY LINE
- SECTION LINE
- CENTER LINE
- EASEMENT LINE
- PROPOSED FIRE HYDRANT
- PROPOSED STREET LIGHT

NOTES

1. **SHALLOW SEWER DEPTHS!!!** CONTRACTOR SHALL VERIFY SEWER LATERAL DEPTH AND SET FOUNDATION ELEVATION TO PROVIDE ADEQUATE FALL INTO SEWER LATERAL. BUILDINGS WITH A BASEMENT MAY NOT HAVE SEWER SERVICE AVAILABLE FOR BASEMENT.
2. THIS AREA IS SUBJECT TO THE NORMAL EVERYDAY SOUNDS, ODORS, SITES, EQUIPMENT, FACILITIES, AND ANY OTHER ASPECTS ASSOCIATED WITH AGRICULTURAL LIFESTYLE. FUTURE RESIDENTS SHOULD ALSO RECOGNIZE THE RISK INHERENT WITH LIVESTOCK.

ROCKY MOUNTAIN POWER NOTES:

1. PURSUANT TO UTAH CODE ANN. § 54-3-27 THIS PLAT CONVEYS TO THE OWNER(S) OR OPERATORS OF UTILITY FACILITIES A PUBLIC UTILITY EASEMENT ALONG WITH ALL THE RIGHTS AND DUTIES DESCRIBED THEREIN.
2. PURSUANT TO UTAH CODE ANN. § 17-27A-603(4)(C)(ii) ROCKY MOUNTAIN POWER ACCEPTS DELIVERY OF THE PUE AS DESCRIBED IN THIS PLAT AND APPROVES THIS PLAT SOLELY FOR THE PURPOSE OF CONFIRMING THAT THE PLAT CONTAINS PUBLIC UTILITY EASEMENTS AND APPROXIMATES THE LOCATION OF THE PUBLIC UTILITY EASEMENTS, BUT DOES NOT WARRANT THEIR PRECISE LOCATION. ROCKY MOUNTAIN POWER MAY REQUIRE OTHER EASEMENTS IN ORDER TO SERVE THIS DEVELOPMENT. THIS APPROVAL DOES NOT AFFECT ANY RIGHT THAT ROCKY MOUNTAIN POWER HAS UNDER:
   - 2.1. A RECORDED EASEMENT OR RIGHT-OF WAY
   - 2.2. THE LAW APPLICABLE TO PRESCRIPTIVE RIGHTS
   - 2.3. TITLE 54, CHAPTER 8A, DAMAGE TO UNDERGROUND UTILITY FACILITIES OR
   - 2.4. ANY OTHER PROVISION OF LAW.

QUESTAR NOTE:
QUESTAR APPROVES THIS PLAT SOLELY FOR THE PURPOSE OF CONFIRMING THAT THE PLAT CONTAINS PUBLIC UTILITY EASEMENTS. QUESTAR MAY REQUIRE OTHER EASEMENTS IN ORDER TO SERVE THIS DEVELOPMENT. THIS APPROVAL DOES NOT CONSTITUTE ABROGATION OR WAIVER OF ANY OTHER EXISTING RIGHTS, OBLIGATIONS OR LIABILITIES PROVIDED BY LAW OR EQUITY. THIS APPROVAL DOES NOT CONSTITUTE ACCEPTANCE, APPROVAL OR ACKNOWLEDGMENT OF ANY TERMS CONTAINED IN THE PLAT, INCLUDING THOSE SET IN THE OWNERS DEDICATION AND THE NOTES AND DOES NOT CONSTITUTE A GUARANTEE OF PARTICULAR TERMS OF NATURAL GAS SERVICE. FOR FURTHER INFORMATION PLEASE CONTACT QUESTAR'S RIGHT-OF-WAY DEPARTMENT AT 1-800-366-8532.

CURVE TABLE

CURVE	RADIUS	LENGTH	DELTA	BEARING	CHORD
C1	724.00'	76.53'	6°03'23"	S3°20'34"W	76.49'
C2	15.00'	23.38'	89°18'50"	N44°58'18"E	21.08'
C3	750.00'	51.61'	4°42'28"	S2°40'05"W	51.59'
C4	750.00'	17.67'	1°20'56"	S5°41'46"W	17.67'
C5	50.00'	41.79'	47°53'19"	S30°18'55"W	40.58'
C6	50.00'	62.23'	71°18'43"	S89°54'56"W	58.29'
C7	50.00'	57.88'	66°19'36"	N21°15'54"W	54.70'
C8	50.00'	58.23'	66°43'38"	N45°15'42"E	55.00'
C9	15.00'	20.28'	77°27'17"	S39°53'53"W	18.77'
C10	898.00'	10.43'	0°51'21"	S0°44'34"W	10.43'
C11	765.00'	12.83'	0°57'39"	S0°47'43"W	12.83'

SURVEYOR'S CERTIFICATE

I, Patrick M. Harris do hereby certify that I am a Licensed Land Surveyor, and that I hold Certificate No. 286682 as prescribed under laws of the State of Utah. I further certify that by authority of the Owners, I have made a survey of the tract of land shown on this plat and described below, And have subdivided said tract of land into lots and streets, hereafter to be known as TAYLOR ACRES SUBDIVISION, and that the same has been correctly surveyed and staked on the ground as shown on this plat. I further certify that all lots meet frontage width and area requirements of the applicable zoning ordinances.

BOUNDARY DESCRIPTION

Beginning at a point said point being South 00°18'53" West 660.00 feet along the section line and North 89°53'34" East 752.00 feet from the Northwest Corner of Section 10, Township 4 South, Range 1 West, Salt Lake Base and Meridian; and running

thence North 89°53'34" East 594.00 feet;
thence South 00°18'53" West 360.00 feet;
thence South 89°47'59" West 330.00 feet;
thence South 00°18'53" West 268.86 feet to the Northerly Right-of-Way Line of 14400 South Street;
thence South 89°37'43" West 264.02 feet along the Northerly Right-of-Way Line of said 14400 South Street;
thence North 00°18'53" East 630.61 feet to the point of beginning

Contains 283,204 Square Feet or 6.547 Acres and 6 Lots

PROFESSIONAL LAND SURVEYOR 5-31-16 No. 286682 PATRICK M. HARRIS STATE OF UTAH

MAY 31, 2016
Date

Patrick M. Harris
P.L.S. 286682

OWNER'S DEDICATION

Know all men by these presents that I / we, the undersigned owner(s) of the above described tract of land, having caused same to be subdivided, hereafter known as the

TAYLOR ACRES SUBDIVISION

do hereby for perpetual use of the public all parcels of land, including streets and utility easements as shown on this plat as intended for public use under the authority and auspices of the City of Bluffdale and other applicable state and federal laws and regulations.

In witness whereof I / we have hereunto set our hand (s) this ____day of _____ A.D., 20___.

By: _____ By: _____

By: _____ By: _____

LIMITED LIABILITY COMPANY ACKNOWLEDGMENT

STATE OF UTAH }S.S.
County of Salt Lake

On the _____ day of _____ A.D., 20 ____, personally appeared before me, the undersigned Notary Public, in and for said County of _____ in the State of Utah, who after being duly sworn, acknowledged to me that He/She is the _____ of _____ a Limited Liability Company and that He/She signed the Owner's Dedication freely and voluntarily for and in behalf of said Limited Liability Company for the purposes therein mentioned and acknowledged to me that said Corporation executed the same.

MY COMMISSION EXPIRES: _____

_____ RESIDING IN _____ COUNTY.
NOTARY PUBLIC

CORPORATE ACKNOWLEDGMENT

STATE OF UTAH }S.S.
County of Salt Lake

On the _____ day of _____ A.D., 20 ____, personally appeared before me, the undersigned Notary Public, in and for said County of _____ in the State of Utah, who after being duly sworn, acknowledged to me that He/She is the _____ of _____ and that He/She signed the Owner's Dedication freely and voluntarily for and in behalf of said Corporation by authority of a resolution of its Board of Directors for the purposes therein mentioned and acknowledged to me that said Corporation executed the same.

MY COMMISSION EXPIRES: _____

_____ RESIDING IN _____ COUNTY.
NOTARY PUBLIC

HORIZONTAL GRAPHIC SCALE
40 0 20 40 80
(IN FEET)
HORZ: 1 inch = 40 ft.

CONTACT

ENSIGN
SALT LAKE CITY
45 W. 10000 S., Suite 500
Sandy, UT. 84070
Phone: 801.255.0529
Fax: 801.255.4449
WWW.ENSIGNENG.COM

LAYTON
Phone: 801.547.1100

TOOELE
Phone: 435.843.3590

CEDAR CITY
Phone: 435.865.1453

BLUFFDALE
Phone: 435.882.2983

TAYLOR ACRES SUBDIVISION

LOCATED IN THE NORTH HALF NORTHWEST QUARTER OF SECTION 10, TOWNSHIP 4 SOUTH, RANGE 1 WEST, SALT LAKE BASE & MERIDIAN BLUFFDALE CITY, SALT LAKE COUNTY, UTAH

SHEET 1 OF 1
PROJECT NUMBER: 6114
MANAGER: BAP
DRAWN BY: KFW
CHECKED BY: PMH
DATE: 5/31/16

CENTURYLINK _____ DATE _____
ROCKY MOUNTAIN POWER _____ DATE _____
QUESTAR _____ DATE _____
COMCAST CABLE _____ DATE _____

SALT LAKE VALLEY HEALTH DEPARTMENT APPROVAL
APPROVED THIS ____ DAY OF _____, 20 ____, BY THE SALT LAKE VALLEY HEALTH DEPARTMENT.
SALT LAKE VALLEY HEALTH DEPARTMENT

SOUTH VALLEY SEWER DISTRICT
APPROVED THIS ____ DAY OF _____, 20 ____, BY THE SOUTH VALLEY SEWER DISTRICT
SOUTH VALLEY SEWER DISTRICT, MANAGER

CITY ENGINEER APPROVAL
I HEREBY CERTIFY THAT THIS OFFICE HAS EXAMINED THIS PLAT AND IT IS CORRECT IN ACCORDANCE WITH INFORMATION ON FILE IN THIS OFFICE.
BLUFFDALE CITY ENGINEER DATE

APPROVAL AS TO FORM
APPROVED AS TO FORM THIS ____ DAY OF _____, 20 ____, BY THE BLUFFDALE CITY ATTORNEY.
BLUFFDALE CITY ATTORNEY

PLANNING COMMISSION APPROVAL
APPROVED THIS ____ DAY OF _____, 20 ____, BY THE BLUFFDALE CITY PLANNING COMMISSION.
CHAIR, BLUFFDALE CITY PLANNING COMMISSION

CITY COUNCIL APPROVAL
PRESENTED TO THE MAYOR AND BLUFFDALE CITY COUNCIL THIS ____ DAY OF A.D., 20 ____, AT WHICH TIME THIS SUBDIVISION WAS APPROVED AND ACCEPTED.
ATTEST: CITY RECORDER MAYOR

RECORDED #

STATE OF UTAH, COUNTY OF SALT LAKE, RECORDED AND FILED AT THE REQUEST OF: _____

DATE: _____ TIME: _____ BOOK: _____ PAGE: _____

FEE$ DEPUTY SALT LAKE COUNTY RECORDER

14175 SOUTH REDWOOD ROAD · BLUFFDALE, UTAH 84065 · (801) 254-2200 · TTY 7-1-1

3 May 2016

Ken Milne
1980 West 14400 South
Bluffdale, Utah 84065

RE: Variance Approval from the Board of Adjustment

The Board of Adjustment considered your variance application for Greyfriar's Estates, Application 2016-03, as presented and approved the variance from section 12-5-3, O.2 of the Bluffdale City Code from 150 feet to up to 36.1 feet for the proposed offset intersection alignment, subject to the following conditions:

1. That the variance allows an offset intersection up to 36.1' (as previously approved in the original variance).
2. That the curb and gutter along the property be placed at the final or build out to City engineer recommendations.
3. That Taylor Ridge Lane be constructed as a ¾ intersection, prohibiting left turn egress movements onto 14400 South, While permitting right-turn egress and left and right-turn ingress.
4. That a raised island be placed at the entrance to the subdivision preventing any left movement when exiting subdivision.
5. That all other requirements and recommendations included in traffic impact study for the subdivision be followed.

The Variance Application was approved with the findings that the application did comply with the required criteria of the Utah State Code Title 10-9a-702 to grant the variance.

This letter is intended as the official approval letter regarding this application. The official minutes from the Board of Adjustment meeting held on May 3, 2016, are available in the office of the City Recorder.

If you have further questions, please contact me at pdouglass@bluffdale.com or 801.858.0510.

Respectfully,

Paul Douglass
Associate Planner

Board of Adjustment and was granted a variance requiring up to 36.1 feet for the offset intersection alignment with the following conditions:

1. That the variance allows an offset intersection up to 36.1' (as previously approved in the original variance).
2. That the curb and gutter along the property be placed at the final or build out to City engineer recommendations.
3. That Taylor Ridge Lane shall be constructed as a ¾ intersection, prohibiting left turn egress movements onto 14400 South, while permitting right-turn egress and left and right-turn ingress.
4. That a raised island be placed at the entrance to the subdivision preventing any left movement when exiting subdivision.
5. That all other requirements and recommendations included in traffic impact study for the subdivision shall be followed.

Agenda Item 8

BLUFFDALE

14175 Redwood Road, Bluffdale, Utah 84065; Tel. 801-559-7781; mfazio@bluffale.com

Memo

Date: 8 July 2016

From: Michael Fazio, P.E.

To: Mark Reid, City Manager
Mayor Timothy
City Council

CC:

RE: Storm Water Pollution Prevention Construction Inspection Contract with Erosion Control Services

---

The City, as an owner of a storm drain system, is required by State and Federal laws to protect the quality of the rivers and streams by preventing pollutants to enter in the storm drain system. The Code, known by the acronym UPDES (Utah Pollution Discharge Prevention Elimination System) prescribes that the City monitors all construction sites that are larger than an acre as well as smaller areas of construction if they are part of a land development, inspecting what are known as BMP (Best Management Practice) or measures that are placed to prevent pollutants from entering the City storm drain system. The City needs a trained personnel to review the applications for a storm water prevention permit and to inspect the BMP's regularly. The City staff selected to hire Erosion Control Services to complete this requirement according to state law.

It is recommended that the contract with Erosion Control Services (ECS) be approved and that the City manager be authorized to enter into contract with ECS.

GENERAL SERVICE AGREEMENT

THIS GENERAL SERVICE AGREEMENT (the "Agreement") dated this ____ day of _____, 2016

BETWEEN:

The City of Bluffdale of 14350 S. 2200 W., Bluffdale, Utah 84065

(the "Client")

-AND-

Erosion Control Services of P.O. Box 1154, Riverton, Utah 84065

(the "Contractor")

BACKGROUND:

A. The Client is of the opinion that the Contractor had the necessary qualifications, experience and abilities to provide services to the Client.

B. The Contractor is agreeable to providing such services to the Client on the terms and conditions set out in this Agreement.

IN CONSIDERATION OF the matters described above and of the mutual benefits and obligations set forth in this Agreement, the receipt and sufficiency of which consideration is hereby acknowledged, the Client and the Contractor (individually the "Party" and collectively the "Parties" to this Agreement) agree as follows:

Services Provided

1. The Client hereby agrees to engage the Contractor to provide the Client with services (the "Services") consisting of:

   Commercial Buildings – Review book and hold pre construction meeting. Certified SWPPP Inspections monthly which includes; completion of electronic copy of site inspections, provided by The City of Bluffdale including list of violations. 6 month increments of $600.00

   Residential Buildings – Review book and hold pre construction meeting. Certified SWPPP Inspections monthly which includes; completion of electronic copy of site inspections, by The City of Bluffdale including list of violations $400.00

   Hourly service fee for other duties not included above, at a rate of $75.00 per hour.

2. The Services will also include any other tasks which the Parties may agree on. The Contractor hereby agrees to provide such Services to the Client.

TERM OF AGREEMENT

3. The term of this Agreement (the "Term") will begin on the date of this Agreement and will remain in full force and effect until June 30, 2017, subject to earlier termination as provided in this Agreement. The Term of this Agreement may be extended with the written consent of the Parties.

4. In the event that either Party wishes to terminate this Agreement, that Party will be required to provide 30 days written notice to the other Party.

PERFORMANCE

5. The Parties agree to do everything necessary to ensure that the terms of this Agreement take effect.

CURRENCY

6. Except as otherwise provided in this Agreement, all monetary amounts referred to in this Agreement are in USD (US Dollars).

COMPENSATION

7. For the services rendered by the Contractor as required by this Agreement, the Client will provide compensation (the "Compensation") to the Contractor of a fixed amount of $0.00

8. Te Client will be invoiced after the work is complete on a monthly basis.

9. Invoices submitted by the Contractor to the Client are due within 30 days of receipt.

10. The Compensation as stated in this Agreement does not include sales tax, or other applicable duties as may be required by law. Any sales tax and duties required by law will be charges to the Client in addition to the Compensation.

REIMBURSEMENT OF EXPENSES

11. The Contractor will not be reimbursed for any expenses incurred in connection with providing the Services of this Agreement.

PENALTIES FOR LATE PAYMENT

12. Any late payments will trigger a fee of 2.50% per month on the amount still owing.

CONFIDENTIALITY

13. Confidential information (the "Confidential Information") refers to any date or information relating to the business of the Client which would reasonably be considered to be proprietary to the Client including, but not limited to, accounting records, business processes, and client records and that is not generally known in the industry of the Client and where the release of that Confidential Information could reasonably be expected to cause harm to the Client.

14. The Contractor agrees that they will not disclose, divulge, reveal, report or use, for any purpose, any Confidential Information which the Contractor has obtained, except as authorized by the Client or as required by law. The obligations of confidentiality will apply during the term of this Agreement and will end on the termination of this Agreement.

15. All written and oral information and material disclosed or provided by the Client to the Contractor under this Agreement is Confidential Information regardless of whether it was provided before or after the date of this Agreement or how it was provided to the Contractor.

OWNERSHIP OF INTELLECTUAL PROPERTY

16. All intellectual property and related material (the "Intellectual Property") that is developed or produced under this Agreement, will be the sole property of the Client. The use of the Intellectual Property by the Client will not be restricted in any manner.

17. The Contractor may not use the Intellectual Property for any purpose other than that contracted for in this Agreement except with the written consent of the Client. The Contractor will be responsible for any and all damages resulting from the unauthorized use of Intellectual Property.

RETURN OF PROPERTY

18. Upon the expiry or termination of this Agreement, the Contractor will return to the Client any property, documentation, records, or Confidential Information which is the property of the Client.

CAPACITY/INDEPENDENT CONTRACTOR

19. In providing the Services under this Agreement it is expressly agreed that the Contractor is acting as an independent contractor and not as an employee. The Contractor and the Client acknowledge that this Agreement does not create a partnership or joint venture between them, and is exclusively a contract for service.

NOTICE

20. All notices, requests, demands or other communications required or permitted by the terms of this Agreement will be given in writing and delivered to the Parties of this Agreement as follows:

    a. The City of Bluffdale
       14350 S. 2200 W.
       Bluffdale, Utah 84065

    b. Erosion Control Services
       P.O. Box 1154
       Riverton, Utah 84065

    Or to such other address as any Party may from time to time notify the other.

INDEMNIFICATION

21. Except to the extent paid in settlement from any applicable insurance policies, and to the extent permitted by applicable law, each Party agrees to indemnify and hold harmless the other Party, and its respective directors, stockholders, affiliates, officers, agents, employees, and permitted successors and assigns against any and all claims, losses, damages, liabilities, penalties, punitive damages, expenses, reasonable legal fees and costs of any kind or amount whatsoever, which result from or arise out of any act or omission of the indemnifying party, its respective directors, stockholders, affiliates, officers, agents, employees and permitted successors and assigns that occurs in connection with this Agreement. This indemnification will survive the termination of this Agreement.

DISPUTE RESOLUTION

22. In the event a dispute arises out of or in connection with this Agreement, the Parties will attempt to resolve the dispute through friendly consultation.

23. If the dispute is not resolved within a reasonable period then any or all outstanding issues may be submitted to mediation in accordance with any statutory rules of mediation. If mediation is unavailable or is not successful in resolving the entire dispute, any outstanding issues will be submitted to final and binding arbitration in accordance with the laws of the State of Utah. The arbitrator's award will be final, and judgment may be entered upon it by any court having jurisdiction within the State of Utah.

MODIFICATION OF AGREEMENT

24. Any amendment of modification of this Agreement or additional obligation assumed by either Party in connection with the Agreement will only be binding if evidenced in writing signed by each Party or an authorized representative of each Party.

TIME OF THE ESSENCE

25. Time is of the essence in this Agreement. No extension or variation of this Agreement will operate as a waiver of this provision.

ASSIGNMENT

26. The Contractor will not voluntarily or by operation of law assign or otherwise transfer its obligations under this Agreement without the prior written consent of the Client.

ENTIRE AGREEMENT

27. It is agreed that there is no representation, warranty, collateral agreement affecting this Agreement except as expressly provided in this Agreement.

ENSUREMENT

28. This Agreement will ensure to the benefit of and be binding on the Parties and their respective heirs, executors, administrators and permitted successor and assigns.

TITLES/HEADINGS

29. Headings are inserted for the convenience of the Parties only and are not to be considered when interpreting this Agreement.

GENDER

30. Words in the singular mean and include the plural and vice versa. Words in the masculine mean and include the feminine and vice versa.

GOVERNING LAW

31. It is the intention of the Parties to this Agreement that this Agreement and the performance under this Agreement, and all suits and special proceedings under this Agreement, be construed in accordance with and governed, to the exclusion of the law of any forum, by the laws of the State of Utah, without regard to the jurisdiction in which any action or special proceeding may be instituted.

SEVERABILITY

32. In the event that any of the provision of this Agreement are held to be invalid or unenforceable in whole or in part, all other provisions will nevertheless continue to be valid enforceable with the invalid or unenforceable parts severed from the remainder of this Agreement.

WAIVER

33. The waiver by either Party of a breach, default, delay or omission of any of the provisions of this Agreement by the other Party will not be considered as a waiver of any subsequent breach of the same or other provisions.

IN WITNESS WHEREOF the Parties have duly affixed their signatures under hand and seal on this _____ day of _____, 2016.

The City of Bluffdale (Client)

Per: _____ (SEAL)

Erosion Control Services (Contractor)

Per: _____ (SEAL)

CITY OF BLUFFDALE, UTAH
RESOLUTION NO. 2016-____

A RESOLUTION OF THE BLUFFDALE CITY COUNCIL AUTHORIZING THE CITY MANAGER TO ENTER INTO A GENERAL SERVICE AGREEMENT WITH EROSION CONTROL SERVICES, INC., TO PROVIDE "SWPPP" INSPECTIONS.

WHEREAS the City must conduct regular inspections of Stormwater Pollution Prevention Plans ("SWPPP") to ensure the City is in compliance with its Utah Pollutant Discharge Elimination System ("UPDES") permit; and

WHEREAS Erosion Control Services, Inc., has the necessary qualifications, experience and abilities to perform these inspections;

NOW, THEREFORE, BE IT RESOLVED BY THE CITY COUNCIL OF THE CITY OF BLUFFDALE AS FOLLOWS:

Section 1. **Authorization to Execute Agreement.** The City Council hereby authorizes the City Manager to enter into a General Service Agreement with Erosion Control Services, Inc., to provide "SWPPP" inspections.

Section 2. **Effective Date.** This Resolution shall become effective immediately upon its passage and the City Council authorizes and directs the Mayor to execute and cause to be delivered the same.

PASSED, ADOPTED AND APPROVED: July 13, 2016.

_____
Mayor Derk P. Timothy

ATTEST: [seal]

_____
Wendy Deppe, City Recorder

Voting by the City Council:	Aye	Nay
Councilmember Jackson	_____	_____
Councilmember Nielsen	_____	_____
Councilmember Preece	_____	_____
Councilmember Westwood	_____	_____
Councilmember Wingate	_____	_____

Agenda Item 9

INTERLOCAL COOPERATION AGREEMENT

MODIFYING THE 2010 INTERLOCAL COOPERATION AGREEMENT THAT ESTABLISHED THE

JORDAN RIVER COMMISSION

THIS INTERLOCAL COOPERATION AGREEMENT (hereinafter "Agreement") is made and entered into as of the _____ day of _____, 2015, by and between the signatories to this Agreement. The signatories to this Agreement are "public agencies" as defined in the Utah Interlocal Cooperation Act, and are hereinafter referred to collectively as "Members" or "Parties" and individually as "Member" or "Party."

W I T N E S S E T H:

WHEREAS, pursuant to the provisions of the Utah Interlocal Cooperation Act (the "Interlocal Cooperation Act"), Title 11, Chapter 13, Utah Code Annotated (the "Utah Code"), public agencies are authorized to enter into mutually advantageous agreements for joint or cooperative action; and

WHEREAS, the Parties to this Agreement believe the Jordan River is one of Utah's great natural treasures and that cooperative action through the creation of a Jordan River Commission (the "Commission") would promote protection of the river in keeping with the Public Trust Doctrine, facilitate orderly planning and development in lands and waters adjacent to the river or impacting the quality of waters flowing into the river while protecting an individual jurisdiction's ability to govern its own area, and assist in the formulation and implementation of comprehensive plans for the management, protection and preservation of the river; and

WHEREAS, the Parties to this Agreement have respectively received appropriate authority to participate, as described herein, in a new Utah interlocal entity to be known as the Jordan River Commission; and

WHEREAS, Envision Utah, after extensive public hearings and public involvement, has developed a document titled "*Blueprint Jordan River*" which sets forth guiding principles and goals developed through a public process for protecting the Jordan River and developing it as a community resource for the citizens of the counties and cities through which it passes; and

WHEREAS, the Commission is responsible for developing broad-based support for

Blueprint Jordan River and fostering the involvement of federal, state and local officials, representatives of private and non-governmental organizations, and the public in the implementation of the Blueprint; and

WHEREAS, the Commission can identify "best practices" with respect to management of the river ecosystem and can use that work to assist the Parties and private entities with professional and technical expertise and coordinate the exchange of information and expertise between the parties; and

WHEREAS, the Commission is an effective and shared entity for on-going planning for the Jordan River that will have political, legal and financial viability; and

WHEREAS, by focusing on the river in its entirety, the Commission coordinates with the cities and the counties in arriving at a comprehensive vision and Jordan River Blueprint for the entire river; and

WHEREAS, the Commission can identify and help solve issues relating to streams and creeks feeding into the Jordan River thus increasing the water quality of the overall system; and

WHEREAS, the Commission, through the broad participation of the Parties and the community can enjoy increased capability to secure governmental, foundation and other financial support for activities improving the river; and

WHEREAS, the parties believe that amendments to the Original Interlocal Agreement creating the Commission (the "Original Agreement") will facilitate the effective operation of the Commission, reflect changes in state law and improve the governance of the Commission

NOW, THEREFORE, in consideration of the mutual covenants and agreements of the parties contained herein, and for other good and valuable consideration, the receipt and sufficiency of which is hereby acknowledged, the Parties hereto agree to amend the Original Agreement as follows:

ARTICLE 1
Definitions

As used herein, the following terms and words shall have the following meanings:

1.1 "Board" or "Governing Board" means the governing body of the Commission.

1.2 “Bonding” means the issuance of “Bonds” and “Bonds” means bonds, notes, certificates of participation or other evidences of indebtedness of the Commission, except as provided herein.

1.3 “Commission” means the Jordan River Commission, the new legal entity created by this Interlocal Cooperation Agreement.

1.4 “Effective Date” means the date the Parties to this Interlocal Cooperation Agreement intend for this Agreement to become effective, and is the date first written above.

1.5 “Governing Body” means the board, commission, council or executive body of a Member to whom a particular decision or governmental action is entrusted by law. For purposes of the financial decisions contemplated by Paragraphs 5.6 and 9.3 of this agreement, “Governing Body“ in a city or county shall mean the city’s or county’s legislative body.

1.6 “Jordan River Blueprint” means a set of guiding principles and standards formally adopted by the Governing Board of the Commission as the principles and standards guiding improvement, use and development of the Jordan River and the lands and wetlands adjoining the river under the jurisdiction of the various local and state governmental entities and may include recommendations to Members and others on how best to set standards for improvement, use and development in the Jordan River Blueprint Study Area. It is the intent of the Parties that the Blueprint Jordan River prepared by Envision Utah and the guiding principles set out therein shall serve as the initial Jordan River Blueprint for the Commission.

1.7 “Members” or “Parties” means the participating counties, municipalities, limited purpose local government entities, and the State of Utah as represented by its participating departments.

1.8 “Ex Officio Members” means entities, associations, or organizations appointed in accordance with Section 5.4.

1.9 “Operation and Maintenance Expenses” means all expenses reasonably incurred by the Commission or paid to any other entity pursuant to contract or otherwise, necessary to fulfill the purposes of this Agreement, including cost of audits hereinafter required, payment of insurance premiums, and, generally all expenses, exclusive of depreciation and other non-cash items which under generally accepted accounting practices are properly allocable to operation and maintenance; however, only such expenses as are ordinary and necessary to the proper and efficient operation of the Commission shall be included.

1.10 “Technical Advisory Committee” or “Technical Committee” means the technical

advisory committee formed pursuant to Article 12 to advise the Governing Board on water quality, environmental, development, engineering, recreation, wildlife, and other technical and relevant issues associated with the Jordan River.

1.11 "Jordan River Blueprint Study Area" means the Jordan River and all lands and wetlands within one-half mile of the river as identified in the Blueprint Jordan River as it currently exists or as it may be amended from time to time.

ARTICLE 2
Purposes

The Original Agreement to create the Commission as a separate legal entity, as provided by the Interlocal Cooperation Act, was entered into and continues in existence by the Members in order to perform the following activities and such others as are authorized by law and approved by the members:

2.1 Encourage and Promote Multiple Uses of the River.

The Commission shall balance access, use, development, ecological value, preservation, restoration and economic benefits in accordance with applicable laws, rules and regulations, and consistent with the fact that the ownership of the river and its adjacent lands and areas are owned or governed by various public and private entities.

2.2 Foster Communication and Coordination.

The Commission shall coordinate communication among agencies and organizations regarding all aspects of land use, water use, water rights, river and river ecosystem protection, recreation, public facilities, and natural resource planning and management that affect the Jordan River and cooperate with state, federal, local governments, as well as private landowners and organizations to implement the purposes and goals of the Commission as adopted in the Jordan River Blueprint as determined by the Board and the "best management practices" developed by its Technical Advisory Committee. The Commission shall coordinate with agencies and entities having jurisdiction over the tributaries of the Jordan River so that the overall health and well being of the River is considered in the activities of those agencies and entities.

2.3 Promote Resource Utilization and Protection.

The Commission shall promote the conservation, restoration and protection of the river's natural resources, including fish and wildlife, riparian habitat, water, water quality,

environmental concerns, and open space.

2.4 Maintain and Develop Recreation Access.

The Commission shall encourage the enhancement of public access to recreational opportunities on and around the river in accordance with the purposes of the Commission and the guiding principles outlined in the Jordan River Blueprint and education and outreach efforts in furtherance thereof.

2.5 Monitor and Promote Responsible Economic Development.

The Commission shall monitor and promote responsible economic activity along the river and in areas affecting the river to promote efficient and orderly development that harmonizes with the aforementioned purposes of the Commission and is in accordance generally with the principles outlined by the Jordan River Blueprint.

2.6 Identify and Secure Funding for the Acquisition of Critical Habitat and Open Space.

The Commission will actively seek public and private funding to be used to acquire critical habitat and open space and to restore vital functioning of the riparian corridor. To that end it may partner with public entities, foundations and other private sources to secure and protect necessary river resources. The Commission shall be authorized to spend Commission and other private and public funding for projects directly benefitting the River regardless of whether those projects are in the Jordan River Study Area.

2.7 Engage in ongoing planning for the Identified Jordan River Blueprint Study Area.

The Commission will engage in a continuing planning process that involves the Members, the Ex Officio Members, other governmental entities and the community to guide development of the river and public and private facilities within the Jordan River Blueprint Study Area.

ARTICLE 3
Term of the Interlocal Cooperation Agreement

The term of this Interlocal Cooperation Agreement shall continue for fifty (50) years from the Effective Date of this Agreement unless this Agreement is sooner terminated by vote of seventy-five percent (75%) of the Members of the Commission or by operation of law.

ARTICLE 4
Creation of the Jordan River Commission

4.1 Independent Legal Entity; Scope.

The Commission became a separate and independent governmental entity on the Effective Date of the Original Agreement pursuant to the provisions of that Agreement and shall continue its operation and existence pursuant to the provisions of that Agreement. The area included for Commission study and action includes the Jordan River Blueprint Study Area as defined in Article 1.

4.2 Headquarters.

The Commission's headquarters shall be located in a Member's geographical boundaries as determined by the Governing Board. The Governing Board may change the location from time to time. The Commission will have a budget as funded by the Board which allows it to hire necessary staff, purchase services from participating governmental entities, and retain the services of necessary legal counsel and consultants in accordance with an annual budget approval by the Board.

ARTICLE 5
Parties to this Agreement

5.1 Initial Membership.

Each signatory to this Agreement hereby contracts with the other signatories of this Agreement to form, and become a Member of, the Commission to accomplish the purposes set forth in Article 2 herein.

5.2 Withdrawal.

Each party to this Agreement acknowledges and agrees that the withdrawal of any Member from this Agreement pursuant to Section 5.6 shall not adversely affect this Agreement nor such party's contractual relationship with any other Party to this Agreement. Withdrawal of a Member does not relieve the Member's obligation to pay its annual dues for current year or its share of obligations, indebtedness, and liabilities incurred prior to withdrawal in accordance with Section 9.3.

5.3 Member Representation on Governing Board.

Membership of the Governing Board shall be made up of the signatories to this Agreement and as noted in Appendix 1 of this Agreement and such Ex Officio members as are admitted pursuant to Section 5.4. These Members shall have voting rights as noted in this Agreement. Counties that have established Municipal Type Services Districts pursuant to UCA 17-34-1 et seq. shall be entitled to two seats on the Governing Board to ensure adequate representation on issues related to unincorporated area land use regulation and county-wide recreational responsibilities.

5.4 Ex Officio Members of the Board.

By a majority vote of the Governing Board, Ex-Officio Members may be appointed or removed from the Board as Ex Officio members. Ex Officio Members shall be selected from other interested parties including recreation organizations; water user organizations; and other public or non governmental organizations. Interested parties may petition the Governing Board to become Ex Officio Members. Ex Officio Members shall be voting members who serve terms of two years and shall pay dues in accordance with Sections 13.1 and 13.3. Ex Officio Membership shall continue for subsequent terms unless terminated by a majority vote of the Governing Board. After the Commission is established and the Governing Board has voted, those appointed to serve as Ex Officio Members of the Board shall be listed in Appendix 1 to this agreement, which Appendix shall be modified as the Governing Board adds to or deletes those who will serve. For every two governmental Members of the Commission, one Ex Officio Member position will be added to the Governing Board. The actual number of Ex Officio Members shall vary from time to time as regular Members join or withdraw from participation in the Commission. An Ex Officio Member may be removed prior to the expiration of the Ex Officio Member's term if a reduction in the total number of Ex Officio Members is required by the withdrawal of a Member. Selection of the Ex Officio Member to be removed shall be by a majority vote of the Governing Board.

5.5 Subsequent Membership.

Public agencies who do not initially approve and become signatories to this Agreement, have withdrawn and wish to reapply, or are newly created municipalities or Limited Purpose Local Government Entities may join and become signatories to this Agreement upon approval of, and pursuant to the conditions established by, the Governing Board.

5.6 Notice of Withdrawal.

A Member, including an Ex Officio Member, may withdraw if the governing body of the Member gives written notice of its intent to withdraw from the Governing Board of the Commission not less than thirty days after the annual budget and dues structure is established for the following fiscal year. Such withdrawal shall take effect on the last day of the current fiscal year. Any such notice shall not affect the obligation of the Member to pay its financial obligations to the Commission for the current fiscal year, including payment of its annual budget commitment. A withdrawal may not materially adversely affect any project or bonds previously approved by the Commission and the governing body of the withdrawing Member. A Member who withdraws its membership shall have no further obligations to the Commission and the Commission shall have no further obligations to the withdrawn Member, except as otherwise expressly provided for herein. The fact that a public agency has previously withdrawn its membership or its membership has been cancelled shall not prohibit said public agency from rejoining the Commission as provided in Section 5.5.

ARTICLE 6
Voting Rights of Members

6.1 Voting by Members and Technical Committee Members.

Each Member of the Governing Board shall be entitled to one vote on the official business that comes before the Board. Technical Committee Members who are not also members of the Governing Board shall not be entitled to vote.

ARTICLE 7
Powers and Authority of the Commission

7.1 Independent Legal Entity; Scope and Location.

The Commission became a separate and independent governmental entity on the effective date of the Original Agreement pursuant to the provisions of that Agreement and the Interlocal Cooperation Act. The Commission shall continue its operation and existence pursuant to the provisions of the Original Agreement. The area for Commission study and action shall include the Jordan River Blueprint Study Area as defined in Article 1.

7.2 Interlocal Cooperation Act Powers.

The Commission shall have all powers granted by the Interlocal Cooperation Act and is hereby authorized to do all acts necessary to accomplish its stated purposes, including, but not limited to, any or all of the following:

7.2.1 To make and enter into contracts consistent with Section 7.5.

7.2.2 To acquire, hold, or dispose of its property, contributions, grants, and donations of property, funds, services, and other forms of assistance from persons, firms, corporations, and governmental entities for projects benefitting the Jordan River and the public interest.

7.2.3 To sue and be sued in its own name.

7.2.4 Except as otherwise provided herein, to lawfully cooperate and/or contract with other entities, Members or Parties to accomplish the purposes of this Agreement.

7.2.5 To exercise all powers necessary and proper to carry out the terms and provisions of this Agreement or otherwise authorized by law.

7.2.6 To borrow money or incur indebtedness, liabilities, or obligations; to issue bonds for the purposes for which it was created; to assign, pledge, or otherwise convey as security for the payment of any such bonds the revenues and receipts from or for the Commission, which assignment, pledge, or other conveyance may rank prior in right to any other obligation except taxes or payments in lieu thereof payable to the State of Utah or its political subdivisions.

7.3 Receive Federal and State Grants and Private Funds.

The Commission is hereby authorized to act as an agency to receive federal and state grants; other grants; or loans on behalf of the members, or funds from private organizations for all planning and development programs and projects which are specifically intended to accomplish the purposes under the Interlocal Cooperation Act and the goals of the Commission.

7.4 The Commission has no Superseding Authority.

The Commission has no authority to nor does it supplant any powers of individual Members as set forth in the Utah Constitution, state law, county or municipal ordinance, or other powers specifically given to them; nor does the Commission have superseding authority over

other government entities and jurisdictions. The Commission shall not have the authority to require alterations of duly adopted plans or decisions of any agency or jurisdiction.

7.5 Contracts.

The Commission may contract generally and, as approved by its Governing Board, enter into contracts or agreements with private organizations, foundations, the federal government, states, counties, municipal corporations, and/or any other governmental agency for any purpose necessary or desirable for dealing with affairs of mutual concern, and/or contract for the provision of services with states, counties, and cities, and to accept all funds resulting therefrom.

7.6 Acquisition of Personal Property.

The Commission may acquire personal property or an undivided, fractional, or other interest in personal property, necessary or convenient for the purposes of the staff of the Commission.

7.7 Acquisition of Real Property.

The Commission may acquire or receive real property or an undivided fractional, or other interest in real property, as approved by the Governing Board, necessary or convenient for the purposes or programs of the Commission.

7.8 Exercise of Powers.

All powers of the Commission shall be exercised pursuant to the terms of this Agreement, its By Laws, and any governing laws.

ARTICLE 8
Responsibilities of the Commission

8.1 Maintain a Jordan River Blueprint.

The Commission shall maintain a Master Jordan River Blueprint (the "Blueprint") that incorporates guiding principles, goals, and standards for the acquisition and protection of open space, the protection of the River, and the development or rehabilitative redevelopment of lands affecting the River. The Blueprint Jordan River and the Salt Lake Water Quality Stewardship Plan shall be guidelines for the Commission's activities. The Blueprint shall be reviewed on a regular basis by the Commission and amended or updated as required. The Commission shall

consider related studies performed by public or private entities in its review of the Blueprint. In no case shall such reviews be performed less frequently than once each five years.

8.1.1 The Blueprint review and adoption process shall achieve the aforementioned purposes of the Commission by:

8.1.1.1 Identifying and securing funding for staff, operations, programs and projects.

8.1.1.2 Creating advisory committees as needed.

8.1.1.3 Gathering information, including hydrology studies, scientific studies and current land use, recreation, transportation, public facilities, water quality, and natural resource management plans.

8.1.1.4 Undertaking studies and assessments to fill in information gaps.

8.1.1.5 Identifying corrective actions needed to restore and/or maintain the ecological integrity of the river, including the chemical, physical, environmental, wildlife, and biological integrity of the Jordan River Blueprint study area.

8.1.1.6 Soliciting public input and participation throughout the process.

8.1.2 The Jordan River Blueprint shall include the following correlated elements:

8.1.2.1 A land use plan which considers Public Trust responsibilities for the management of the river as a basis for making decisions regarding the river and the lands adjacent to it. The Jordan River Blueprint process shall balance economic benefits, public access, use and enjoyment, and protection. It shall develop recommendations for use by public agencies in developing plans for the river and adjacent lands including land use planning coordination.

8.1.2.2 A transportation plan which includes consideration for roads, trails, mass transit, access areas, buffer zones, restrictions and limitations.

8.1.2.3 A natural resources conservation and management plan which includes, but is not limited to, improving the quality of the river and its water in order to

improve all aspects of conservation, recreation, wildlife, riparian interests, wetlands, and open space.

8.1.2.4 A recreation plan which includes consideration for trails, entry points, public access areas and other areas of public interest.

8.1.2.5 A public services and capital facilities plan.

8.1.2.6 A protection plan for the river and critical lands.

8.1.2.7 Prioritization of land and resource acquisition necessary for the protection of the river, development of it as a recreational resource, and protection of the river's ecosystem.

8.1.3 General Plans. The Jordan River Blueprint shall take into consideration the General Plans of public agencies having jurisdiction over the river or its adjacent lands. The Commission shall utilize its Technical Advisory Committee as needed to assist in the preparation of the Jordan River Blueprint.

8.1.4 The Commission shall coordinate the implementation of the Jordan River Blueprint as follows:

8.1.4.1 Have regular publicized meetings to receive input from the public, governmental agencies, private landowners and other organizations and manage the many aspects of implementing, reviewing, and monitoring the Jordan River Blueprint.

8.1.4.2 Establish policies and procedures that assure problem solving, communication, and coordination with governmental agencies that are not Members of the Commission.

8.1.4.3 Ensure public participation is encouraged and solicited.

8.1.4.4 Review governmental agencies currently adopted plans for the Jordan River Blueprint Study Area and recommend additions or changes in conformance with the Jordan River Blueprint. This review will include offering assistance, technical reviews and coordination of all planning and activities that will impact the river and the landholders in the Jordan River Blueprint Study Area.

8.1.4.5 Review governmental agencies' ordinances, rules, standards, and regulations and recommend additions or changes in conformance with the Jordan River Blueprint, upon request of the member government.

8.2 Effect of Vote.

Adoption by vote of the Board shall be the consensus of the Commission and Members and Ex Officio Members should all work in unity to implement measures necessary to carry out that which has been adopted.

8.3 Review of Private Development Proposals.

Upon approval by the Board of processes for the review of private development plans, programs and proposals, including residential, commercial, and recreational developments, ("private submissions"), the Commission will review all such private submissions for lands within one-half mile from the River. The Commission shall review private development proposals as they occur, upon request of the affected Member or the private party. The Commission shall provide timely comments regarding Jordan River Blueprint consistency on the proposed development to the local jurisdiction and the proponent of the development. The Commission may work with the parties to resolve any issues of inconsistency by providing detailed research, suggestions, and advisory and technical support required to bring the private submission into consistency with the Jordan River Blueprint. The comments of the Commission are advisory only and final approval of the specifics of any plan shall be left to the sole discretion of the reviewing agency that has jurisdiction over said submission.

8.4 Review of Proposed Governmental Agency Actions.

Upon approval by the Board of processes for the review of government agency plans, programs, proposals, regulations, ordinances, rules or modifications thereof ("agency submissions"), the Commission will review all such agency submissions that affect lands within one-half mile from the River for consistency with the Jordan River Blueprint. The Commission shall review governmental agency actions as they occur, upon request of the affected Members. The Commission shall provide timely comments regarding Jordan River Blueprint consistency on the proposed proposal to the public agency. The Commission may work with the agency to resolve any issues of inconsistency by providing detailed research, suggestions, and advisory and technical support required to make the agency submission consistent with the Jordan River Blueprint. The comments of the Commission are advisory only and final approval of the specifics of any plan shall be left to the sole discretion of the reviewing agency that has jurisdiction over said submission.

8.5 Adoption of Uniform Ordinances and Standards.

The Commission shall have the power to recommend by resolution, any ordinances, rules, regulations or policies not inconsistent with state law which are necessary, appropriate, or incidental to effectuate the Jordan River Blueprint. The resolutions shall recommend general standards, including but not limited to the following: water quality, subdivision development, zoning, solid waste disposal, sewage disposal, tree removal, development in the river flood plain, outdoor recreation, flood plain protection, soil and sedimentation control, air pollution and watershed protection. Whenever possible without diminishing the effectiveness of the Jordan River Blueprint, the recommended ordinances, rules, regulations and policies shall be confined to matters which are general in nature. The comments of the Commission are advisory only and the specifics of any such matter adopted by a governmental jurisdiction shall be left to the sole discretion of the adopting agency.

8.6 Require the Permanent Conservation of Acquired or Restored Critical Habitat or Open Space.

The Commission shall require that, as soon as is practical, any lands acquired or restored with the use of funds generated by the Commission for the purpose or purposes of critical habitat be permanently preserved through placing an appropriate deed restriction, conservation easement or other like encumbrance that perpetually protects the resources of and on the property. The deed restriction, conservation easement or other like encumbrance shall be held by a third party entity approved of by a vote of the Commission.

8.7 Identify Maintenance Needs.

Continually identify maintenance projects and opportunities for improvements that should be pursued; develop funding, an annual work program, and a long-range strategy to carry out the projects.

ARTICLE 9
Liabilities and Obligations of Members

9.1 Governmental Immunity.

In entering into this Agreement, the Members do not waive, and are not waiving, any immunity provided to the Members or their officials, employees, or agents by the Governmental Immunity Act of Utah, Title 63G, Chapter 7, Utah Code (the “Immunity Act”), or by other law.

9.2 Waiver of Obligations.

This Agreement shall not relieve any Member of any obligation or responsibility imposed upon it by law. However, to the extent of actual and timely performance thereof by the Commission, such performance may be offered in satisfaction of such obligation or responsibility.

9.3 Obligations Special and Limited.

The obligations entered into by each Member pursuant to this Agreement are special limited obligations of each such Member, and nothing herein shall be construed or give rise to a general obligation or liability of any Member or a charge against its general credit or taxing powers. Members may enter into agreements to pledge revenues to finance projects undertaken by the Commission and to secure the bonds issued by the Jordan River Commission to finance such projects. Such pledges shall constitute ongoing financial obligations of the pledging Members only to the extent expressly authorized by the governing body of each Member and as provided for in the agreement authorizing the issuance of the bonds and pledging the revenues of the pledging Member.

9.4 Bonding.

Any Bonds issued or incurred by the Commission shall not constitute a debt of any individual Member, but shall be secured only in the manner set forth herein and pursuant to the terms of the separate agreement entered into by the individual pledging Member authorizing the issuance of the Bonds. There shall be no additional liability or obligation of a Member except as provided in Section 9.3.

9.5 Indemnification.

The Commission shall defend, indemnify, save harmless, and exempt the Members, their officers, agents, and employees from and against all claims, suits, legal proceedings, demands, damages, costs, expenses, and attorneys' fees incident to any willful or negligent acts or omissions by the Commission, its officers, agents, or employees. The Governing Board shall, prior to the commencement of construction of any project undertaken by the Commission provide for risk and liability coverage and payment and performance bonds in such amounts as the Commission deems necessary to insure against risks arising from the undertaking the project.

ARTICLE 10
Governing Board

10.1 Appointment.

There is hereby created a Governing Board of the Commission which shall consist of the following:

10.1.1 Appointed elected officials from each participating county, appointed in accordance with Section 5.3 and each county's respective rules or ordinances governing appointments to Boards;

10.1.2 An appointed elected official from each of the participating municipalities, appointed in accordance with each municipality's respective rules governing appointments to Boards;

10.1.3 An appointed representative of each department, division or agency of the State of Utah participating in the Commission as determined by the executive director of the department, division or agency;

10.1.4 One individual appointed by the Governor of the State of Utah;

10.1.5 A member of the Utah Legislature whose District includes all or a portion of the Jordan River, appointed jointly by the President of the Senate and the Speaker of the House;

10.1.6 An appointed representative of each Ex Officio Member appointed by that organization's governing body; and

10.1.7 An appointed member from each Limited Purpose Local Government Entity appointed in accordance with that entity's adopted policies or procedures

10.2 Terms.

The Governing Board members shall serve until replaced by the respective Member or Ex Officio Member that appointed the Board member or until no longer qualified to serve by virtue of no longer serving as an elected official. Reappointments and replacements should be by appointment of the public agency who appointed the Member being replaced or reappointed.

10.3 Compensation.

Members of the Governing Board shall serve without compensation and have their expenses paid by their appointing agency.

10.4 Leadership.

The Governing Board shall have a Chair, Vice-Chair, and Past Chair elected by and from their members, whose term shall be set in the By Laws.

10.5 Alternates.

The Board representative may send an alternate to act in his or her place at a Board or Executive Committee meeting, except if the Board representative is the Chair, then that Board representative's responsibilities for conducting the meeting or signing documents shall fall to the Vice-Chair.

10.6 Regular Meetings.

The Governing Board should hold regularly scheduled public meetings to accomplish the objectives of the Commission and adopt, amend and repeal By Laws, rules, policies and procedures for the conduct of their affairs. The Board shall hold at least one regular meeting annually. Meetings may be conducted by telephonic or other electronic means of communication. All meetings shall be noticed and conducted in accordance with the Utah Open and Public Meetings Act.

10.7 Minutes.

The Governing Board shall cause to be kept minutes of all meetings of the Board in accordance with the Utah Open and Public Meetings Act. As soon as possible after each meeting, a draft copy of the minutes shall be forwarded to each member of the Board.

10.8 Majority Vote.

The presence of the Board members entitled to cast a majority of the votes of the entire Board shall constitute a quorum for the transaction of business. Unless otherwise requiring a 2/3 or greater vote or a majority vote of all Members, a majority vote of the total votes of the Board members present when a quorum exists, shall constitute action by the Board.

10.9 Notice of Meetings.

Notice to Board members shall be sufficient if delivered in writing, by fax, or by e-mail to the designated representative of the respective Member, at the address, fax number, or e-mail address provided. Public notice of meetings shall be given in accordance with the Utah Open and Public Meetings Act.

10.10 Requests for Information.

The Governing Board shall have an ongoing duty to see that all of its Members are informed regarding all activities of the Commission and, accordingly, shall cause a copy of all materials (unless they are not public records; in which case, notice of their existence shall be given) delivered in the manner it deems appropriate to Board members for meetings of the Board, including meeting agendas and minutes of past meetings, and to such other persons as the Member may request in writing, including each Member's legal counsel. The Executive Director shall promptly respond to all requests for information made by any Member.

ARTICLE 11
Powers and Duties of the Governing Board

The Governing Board shall have the following powers and duties:

11.1 Executive Committee.

The Governing Board shall have the authority to appoint an Executive Committee consisting of members of the Board.

11.1.1 The Executive Committee shall include a Past Chair elected by the Board, the Chair, the Vice-Chair and other members as determined by the Board through its By Laws.

11.1.2 The Board may delegate to the Executive Committee such powers and responsibilities as the Board deems appropriate.

11.1.3 The voting, powers, and responsibilities of the Executive Committee shall be as established in the By Laws of the Commission.

11.1.4 The Governing Board may not delegate the following powers and duties: (i) the election of the Past Chair, Chair and Vice Chairs of the Board; (ii) the election of the group representatives to the Executive Committee; (iii) the power to adopt, modify, and

approve changes in the By Laws and the power to recommend proposed changes to the Agreement that must be approved by the Members' governing bodies; (iv) the power to terminate or dissolve the Commission; and (v) the adoption of budgets, amendment of budgets or the allocation or reallocation of budgeted amounts between budget categories.

11.1.5 Other Committees. The Governing Board shall have the authority to appoint additional committees made up of members of the Governing Board and such other individuals as are approved by the Board. It shall also have authority to establish committees separate and apart from the Technical Committee established in Article 12, to advise and confer with the Governing Board and the Technical Advisory Committee.

11.1.5.1 Membership of the various committees shall be at the will and pleasure of the Governing Board, for time limited or project limited assignments, and are not permanently associated with the Commission.

11.1.5.2 The various committees shall engage in such projects and reviews as assigned by the Governing Board.

11.2 Executive Reports.

The Governing Board shall receive and act upon reports of the Executive Committee and of the Executive Director.

11.3 Executive Director and Staff.

The Governing Board may hire a limited staff including appointing an Executive Director on such terms and conditions as the Board determines appropriate, and may employ such persons as the Board deems necessary for the proper administration of the Commission. The Governing Board shall have the general supervisory and policy control over the day to day decisions and administrative activities of the Executive Director.

11.4 By Laws.

The Governing Board shall adopt By Laws in compliance with state law and as otherwise deemed needed by the Governing Board and thereafter amend the By Laws in compliance with state law. The adoption and any amendments shall be by a seventy-five percent (75%) vote of the Board. Each Member shall receive a copy of the By Laws.

11.5 Rules.

The Governing Board shall have the authority to establish rules governing its own conduct and procedures not inconsistent with the By Laws.

11.6 Records.

The records of the Commission shall be governed by the "Government Records Access and Management Act," Section 63G-2-101, et seq., to the extent applicable, except that the governing body and/or legal counsel of each Member shall have full access to inspect all records and copy public records of the Commission.

11.7 Policies and Procedures.

The Governing Board shall adopt policies and procedures in compliance with state law and as otherwise deemed needed by the Governing Board, and thereafter amend the policies and procedures. The adoption and amendments shall be by a majority vote of the Board. Each Member shall receive a copy of the policies and procedures.

ARTICLE 12
Technical Advisory Committee

12.1 Creation.

There is hereby created a Technical Advisory Committee to the Commission which shall consist of appointed representatives as follows:

12.1.1 One representative from each participating county, appointed in accordance with each county's respective rules governing appointments to Boards;

12.1.2 One appointed representative from each of the participating municipalities listed in Appendix 1, appointed in accordance with each municipality's respective rules governing appointments to Boards;

12.1.3 One appointed representative from the Department of Environmental Quality, Division of Water Quality and each of the following Divisions of the Department of Natural Resources: Division of Wildlife Resources, Division of Forestry, Fire and State Lands; Division of Parks and Recreation; and the Division of Water Resources, as determined by the Department;

12.1.4 One appointed representative of the Jordan Valley Water Conservancy District, appointed by its board;

12.1.5 Three individuals representing the Ex Officio Members appointed by majority vote of the Ex Officio Members.

12.1.6 One member from each local district or public utility designated by the Governing Board for participation on the Technical Advisory Committee. The Governing Board shall choose one or more local districts or utilities operating in the jurisdictions of the Members to represent the interests of all such local districts or utilities.

12.1.7 Additional members as appointed by the Governing Board.

12.2 Terms.

The terms of Technical Advisory Committee members shall be set in the By Laws. Reappointments and replacements shall be by appointment of the public agency who appointed the member being replaced or reappointed or by vote of the Ex Officio Members.

12.3 Compensation.

Members of the Technical Advisory Committee shall serve without compensation by the Commission and shall have their expenses paid by their appointing agency.

12.4 Leadership.

The Technical Advisory Committee shall have a Chair and a Vice-Chair elected by and from their members, whose term shall be set in the By Laws.

12.5 Advice.

The Technical Advisory Committee shall advise the Governing Board with respect to the technical aspects of the Governing Board's work including water rights affecting the River, maintaining or amending the Jordan River Jordan River Blueprint, standards, goals, best management practices and recommendations for uniform rules, regulations, policies and ordinances.

12.6 Meetings.

Unless otherwise provided by By Laws or resolution of the Board, the Technical Advisory Committee shall meet as often as it deems necessary to conduct its business.

12.7 Information Gathering.

The Technical Advisory Committee, on its own initiative or when requested by the Board or Executive Director, shall gather information, investigate the appropriate issues, and make recommendations to the Board.

12.8 Subcommittees.

The Technical Advisory Committee may create subcommittees from among its members and appoint others to work with said committees as it deems necessary to fulfill its purposes and specific assignments.

ARTICLE 13
Funding, Budget, Accounts and Financial Records

13.1 Funding; Investment and Disbursement of Funds.

The Members, including Ex Officio Members, shall contribute based on a formula developed and approved by the Board to cover annual operating expenses, including projects approved by the Board. Other sources of funding could include fees and contributions from other Federal agencies, State agencies, local governments, grants from private individuals or organizations, developers, and businesses. Failure of a Member to provide its contribution shall constitute a breach of this Agreement. The Governing Board shall provide for the investment and disbursement of funds and their periodic review.

13.2 Annual Budget.

The Governing Board shall annually adopt an operating budget pursuant to the provisions of this Agreement, By Laws or policies adopted by the Governing Board and applicable law. The annual budget shall be approved by the Governing Board not less than sixty days prior to the end of the fiscal year. A funding formula for calculating Member contributions and dues established by the Board may be modified by a 2/3 vote of the Commission Members, but such changes shall not take effect until the beginning of a new budget year. The Members recognize and agree that

all individual Member contributions for annual dues or project costs are subject to the availability and appropriation of funds by that Member.

13.3 Funds and Accounts.

The Executive Director shall establish and maintain such funds and accounts as may be required by governmental accounting practices and the State's fiscal procedures act. Financial records of the Commission shall be open to inspection at all reasonable times by Members' representatives and shall be public records if so required by Utah State law.

13.4 Certified Annual Audit.

The Governing Board shall provide for a certified annual audit, or other financial reporting as required by law, of the accounts and records of the Commission, which shall conform to generally accepted accounting standards and requirements set forth by the Utah State Auditor. Such annual audit shall be open for inspection by each Member representative at all reasonable times.

13.5 Executive Director's Responsibility for Funds.

The Executive Director shall have custody of and shall disburse the Commission's funds. The Executive Director shall have the authority to delegate the signatory function to such persons as are authorized by the Governing Board.

13.6 Fidelity Bonds.

Unless otherwise provided for by the Governing Board, a fidelity and/or treasurer's bond may be required of all officers, agents, and personnel authorized to disburse funds of the Commission. The cost of such bond shall be paid by the Commission.

13.7 Financial Records.

The Executive Director shall keep and maintain, or cause to be kept and maintained, adequate and correct financial records, including accounts of its assets, liabilities, receipts, and disbursements, and shall have such other duties as are provided for in the By Laws.

13.8 Selling of Services.

The Executive Director may authorize the sale of the Commission's services, output or products to other entities upon approval of the Board.

ARTICLE 14
Dissolution of the Commission

14.1 Outstanding Indebtedness.

So long as there are any outstanding Bonds or other indebtedness of the Commission, the Commission shall remain a separate legal entity with all of the powers and duties set forth in this Agreement and all of the responsibilities, covenants, and obligations required in the Bond documents.

14.2 Dissolution of the Commission by Vote.

If there are no outstanding Bonds or other indebtedness that cannot be covered by current funds, the Commission may be dissolved with a seventy-five percent (75%) vote of the Members at any time.

14.3 Powers of Governing Board Upon Dissolution.

The Governing Board is vested with all powers necessary for the purpose of winding up and dissolving the business affairs of the Commission consistent with and subject to the limits of this Agreement.

14.4 Division of Assets.

Upon dissolution and after payment in full of all outstanding Bonds and other Commission obligations, the Governing Board shall equitably disburse the assets of the Commission to the then current Members. After deducting costs, any cash or other assets jointly shared shall be disbursed, or interests deeded, pro rata.

ARTICLE 15
Filing of this Interlocal Cooperation Agreement

A copy of this Interlocal Cooperation Agreement shall be placed on file in the office of the Official Record Keeper of each public agency that is a Member hereto and shall remain on file for public inspection during the term of this Agreement.

ARTICLE 16
Miscellaneous Provisions

16.1 Confidentiality.

The Governing Board and Technical Advisory Committee shall take such steps as they deem necessary to protect and keep confidential appropriate information received or kept by it in accordance with the Government Records Access and Management Act. The Members shall protect and keep confidential information kept or received by the Commission during the term of this Agreement and after the termination of their membership in the Commission pursuant to the By Laws or other policies adopted by the Board and consistent with law. Nothing in this section shall be construed to allow the Board, the Technical Advisory Committee, the Officers or employees from withholding information from any Commission Member, so long as the Member agrees to maintain the confidentiality of such information.

16.2 Status of Members' Employees.

When members of the Governing Board and the Technical Advisory Committee, and the employees and agents of the Commission are acting on behalf of the Commission within the scope of their authority, office or employment, they shall be considered to be acting on behalf of their respective public agency employer within the meaning of the Governmental Immunity Act and Section 63G-7-101, et seq., and thus, shall be entitled to indemnification and representation so long as they meet the requirements of said Act.

16.3 Prohibition Against Assignment.

No Member may assign any right, claim, or interest it may have under this Agreement; and no creditor, assignee, or third party beneficiary of any Member shall have any right, claim, or title to any asset of the Commission.

16.4 Severability Clause.

In the event that any article, provision, clause, or other part of this Agreement should be held invalid or unenforceable by a court of competent jurisdiction, such invalidity or unenforceability will not affect the validity or enforceability with respect to other articles, clauses, applications, or occurrences, and this Agreement is expressly declared to be severable.

16.5 Complete Agreement.

The foregoing constitutes the full and complete Agreement of the parties. There are no oral understandings or agreements not set forth in writing herein.

16.6 Amendment.

This Agreement may be amended at any time by the written approval of seventy-five percent (75%) of all current Members signatory to it.

16.7 Governing Law.

This Agreement shall be governed according to the laws of the State of Utah.

16.8 Binding Effect.

This Agreement shall bind the parties, their successors and assigns.

16.9 Captions.

The captions to the various Sections of this Agreement are for convenience and ease of reference only and do not define, limit, augment, or describe the scope, content, or intent of this Agreement or any part or parts of this Agreement.

16.10 Time.

Time is of the essence of each term, provision, and covenant of this Agreement.

16.11 Appendices and Exhibits.

The Appendices attached hereto, and those Appendices and Exhibits subsequently attached hereto from time to time by a seventy-five percent (75%) vote of the Governing Board, shall be considered to be a part of this Agreement and binding upon all parties. The parties'

signatures on any Appendices and Exhibits shall be evidence that the same are accepted.

16.12 Counterparts.

This Agreement may be executed in counterparts, each of which shall be deemed an original, but all of which shall constitute one and the same instrument.

16.13 Breach of Agreement.

The failure of a party to substantially comply with the material terms and conditions of this Agreement shall constitute a breach of this Agreement. A party shall have thirty (30) days after receipt of written notice to correct the conditions specified in the notice, or if the corrections cannot be made within the thirty (30) day period, within a reasonable time if corrective action is commenced within ten (10) days after receipt of the notice. After notice, if corrective action is not taken, the Board may take appropriate action including revocation of the breaching party's membership.

SIGNATURE PAGE

INTERLOCAL COOPERATION AGREEMENT

MODIFYING THE 2010 INTERLOCAL COOPERATION AGREEMENT THAT ESTABLISHED THE

JORDAN RIVER COMMISSION

IN WITNESS WHEREOF, the parties have signed and executed this Interlocal Cooperation Agreement amending the 2010 Interlocal Cooperation Agreement that created the Jordan River Commission, after resolution duly and lawfully passed, on the dates listed on the signatory pages, below, to become effective on the Effective Date, first written above.

[ENTITY]

By_____
[Title]

CITY OF BLUFFDALE, UTAH
RESOLUTION NO. 2016-____

A RESOLUTION OF THE BLUFFDALE CITY COUNCIL AUTHORIZING THE MAYOR TO ENTER INTO AN INTERLOCAL COOPERATION AGREEMENT MODIFYING THE 2010 INTERLOCAL COOPERATION AGREEMENT THAT ESTABLISHED THE JORDAN RIVER COMMISSION, WITH THE CITY OF BLUFFDALE BECOMING A MEMBER OF THE COMMISSION.

WHEREAS the Jordan River Commission ("Commission") has been created to promote protection of the Jordan River in keeping with the Public Trust Doctrine, facilitate orderly planning and development in lands and waters adjacent to the river or impacting the quality of waters flowing into the river while protecting an individual jurisdiction's ability to govern its own area, and assist in the formulation and implementation of comprehensive plans for the management, protection and preservation of the river; and

WHEREAS, the City desires to become a member of the Commission, in order to protect, maintain and beautify the City's portion of the river front;

NOW, THEREFORE, BE IT RESOLVED BY THE CITY COUNCIL OF THE CITY OF BLUFFDALE AS FOLLOWS:

Section 1. **Authorization to Execute Agreement.** The City Council hereby authorizes and directs the Mayor to execute an Interlocal Cooperation Agreement Modifying the 2010 Interlocal Cooperation Agreement that Established the Jordan River Commission, with the City of Bluffdale becoming a member of the Commission.

Section 2. **Effective Date.** This Resolution shall become effective immediately upon its passage and the City Council authorizes and directs the Mayor to execute and cause to be delivered the same.

PASSED, ADOPTED AND APPROVED: July 13, 2016.

_____
Mayor Derk P. Timothy

ATTEST: [seal]

_____
Wendy Deppe, City Recorder

Voting by the City Council:	Aye	Nay
Councilmember Jackson	_____	_____
Councilmember Nielsen	_____	_____
Councilmember Preece	_____	_____
Councilmember Westwood	_____	_____
Councilmember Wingate	_____	_____